LBL-32931
BS-291

ASHRAE/DOE/BTECC Conference Proceedings, "Thermal Performance of the Exterior Envelopes of Buildings V," December 7-10, 1992, Clearwater Beach, FL.

A Method of Optimizing Solar Control and Daylighting Performance in Commercial Office Buildings

R. Sullivan, E.S. Lee, and S. Selkowitz
Energy and Environment Division
Lawrence Berkeley Laboratory
University of California
Berkeley CA 94720

September 1992

This research was funded by the California Institute for Energy Efficiency (CIEE), a research unit of the University of California. Additional related support was provided by the Assistant Secretary for Conservation and Renewable Energy, Office of Building Technologies, Building Systems and Materials Division of the U.S. Department of Energy under Contract No. DE-AC03-76SF00098.

A Method of Optimizing Solar Control and Daylighting Performance in Commercial Office Buildings

R. Sullivan, E.S. Lee, and S. Selkowitz

ABSTRACT

We present a method for analyzing the annual cooling and lighting electricity use and peak demand associated with varying fenestration and lighting strategies in commercial office buildings. A prototypical office building module consisting of four perimeter zones and a central core zone was defined and a series of DOE-2 building energy simulations were completed to create a data base for varying fenestration and lighting system parameters. Using regression analysis procedures, we characterize electric energy and peak performance patterns as a function of *solar aperture*, defined as the product of shading coefficient and window-to-wall ratio, and *effective daylighting aperture*, defined as the product of visible transmittance and window-to-wall ratio. Optimum performance consists of defining the solar and effective daylighting aperture values that minimize annual energy consumption and peak demand, a process easily facilitated by the methods described herein.

INTRODUCTION

Electrical energy use accounts for a large percentage of all primary energy use in the building sector. For example, in California the figure is 54% (CEC 1990); for the commercial building sector in California, 38% of electric energy consumption is directly attributable to lighting and 19% to cooling energy requirements mostly due to the building envelope. These two major interrelated building subsystems, electric lighting and the building envelope, also account for more than half of typical peak demand in California buildings. The envelope of the building, primarily the glazing, is a major source of peak cooling demand and of annual cooling load; it is also a potential source of daylight that may be employed to offset electric lighting loads. Despite improvements in lighting technology, especially new lamps and ballasts, lighting remains a key contributor to energy use and peak demand. Lighting controls, integrated with daylighting, afford the opportunity to significantly reduce lighting requirements and cooling loads.

No methods currently available allow one to easily ascertain the benefits and the liabilities of a glazing choice given the complex interrelationships between the building envelope and the lighting system. At present, one must weigh the solar gain impact of a glazing choice against its daylighting potential separately by studying incremental differences in the cooling and lighting energy use as a function of a given prototype configuration. In this paper, we present a method that allows a simultaneous evaluation of both the benefits and liabilities of a daylighting system. This work is part of a research effort to develop building envelope and lighting systems that have no incremental energy use greater than that of an opaque wall and, later, systems that have lower energy requirements. In order to develop the technology, we first need an approach to understand the issues and find appropriate design solutions.

We show how the fenestration and lighting system energy performance can be optimized by considering the relationships between window size, glazing shading coefficient and visible transmittance, daylighting control strategy, and lighting power density. Initially, we discuss analytical procedures and give a brief description of the building configuration used in our analysis. This is followed by a discussion of how the building's solar and effective daylighting apertures influence annual electric energy performance. We conclude by showing that the

R. Sullivan is a Staff Scientist, E.S. Lee is a Research Associate, and S. Selkowitz is the Program Leader in the Building Technologies Program, Energy and Environment Division, Lawrence Berkeley Laboratory, Berkeley, California.

integration of the solar and effective daylighting apertures yields a convenient technique for assessing performance.

BACKGROUND

The analysis of commercial building energy performance is conveniently facilitated by numerical simulation using computers. The DOE-2.1D Building Energy Simulation Program (SRG 1985) is one such computer program. It facilitates sophisticated, yet simple, input descriptions for buildings and their associated HVAC equipment and calculates the zone and/or building level load and energy use data for designated time periods. To better understand the factors affecting fenestration and lighting system performance, we used the DOE-2 program and followed a series of steps that represent the distillation of laboratory parametric performance studies that has been evolving over many years:

1. Definition of a commercial office building module that allows us to isolate perimeter and core zone energy performance as a function of various envelope and lighting system parameters.

2. Creation of a data base of DOE-2 simulations for varying building configurations, including parametric variation of lighting system characteristics and fenestration parameters.

3. Completion of a regression analysis of the DOE-2 data base that yields a simplified algebraic expression used to investigate the performance of any arbitrary fenestration and lighting system configuration.

Each of these steps is discussed in detail in studies by Sullivan et al. (1988, 1985). The building module (Figure 1) has four perimeter zones consisting of ten offices, each 15 ft (4.57 m) deep by 10 ft (3.05 m) wide, surrounding a central core zone of 10,000 ft^2 (929 m^2) floor area. Floor-to-ceiling height is 8.5 ft (2.59 m); floor-to-floor height is 12 ft (3.66 m). Normal building thermal interactions included heat capacity effects and small convective/conductive transfers between the core and perimeter zones. The exterior wall U-value was fixed at 0.05 $Btu/h{\cdot}ft^2{\cdot}°F$ (0.28 $W/m^2{\cdot}C$). More detailed information about the building module can be obtained from Sullivan (1988, 1985).

We varied several window and lighting system variables parametrically to facilitate an understanding of their effects on energy performance. Continuous strip windows were used in the exterior wall of each perimeter zone. Glazing area was varied using window-to-wall ratios corresponding to 0, 15%, 30%, 50%, and 70% of the floor-to-floor wall area. Five glazing types were simulated. These glazings covered a range of U-value (0.22 - 1.1 $Btu/h{\cdot}ft^2{\cdot}°F$, 1.25 - 6.08 $W/m^2{\cdot}C$), shading coefficient (0.20 - 0.95), and visible transmittance (0.10 - 0.88) levels that are representative of currently available products. An interior shading device (diffusing shade) was deployed when the quantity of transmitted solar radiation exceeded 30 $Btu/h{\cdot}ft^2$ (94.5 W/m^2). When deployed, the fenestration system shading coefficient was reduced by 40% and the visible transmittance by 65%.

We simulated the daylighting performance of each perimeter zone assuming the use of continuous dimming control for changing electric lighting levels in response to the variable daylight source. The desired work plane illuminance was varied from 20 fc (215 lux) to 80 fc (861 lux) and the installed lighting power density was varied from 0.30 W/ft^2 (3.22 W/m^2) to 2.7 W/ft^2 (29.1 W/m^2). Daylighting levels were determined at one reference point in each perimeter zone office at a height above the floor of 2.5 ft (8.76 m) and at a depth of 10 ft (3.05 m) centered with respect to the window.

A large number of DOE-2 simulations were completed using weather data representative of Los Angeles, California. A data base of energy and peak demand quantities was constructed from which we performed a regression analysis to develop simplified algebraic expressions that could replicate the DOE-2 results and facilitate analysis of arbitrary glazing and lighting system characteristics. We derived equations that predicted perimeter and core zone cooling loads, with and without the use of daylighting. Total building energy use was found by summing the individual zonal load components, assuming a fixed cooling system coefficient of performance. Peak electricity demand was determined by developing a correlation to associated annual electricity use.

DISCUSSION

We first focus on typical energy-use patterns associated with changing fenestration and lighting strategies. This provides a firm foundation for a later discussion dealing with arbitrary configuration changes. Our primary concern is with the interactions between the following parameters:

Fenestration System	Lighting System
Orientation	Lighting control strategy
Size	Lighting power density
Shading coefficient	Desired illumination level
Visible transmittance	

The fenestration system's orientation, size, and shading characteristics modify solar gain and thus affect the cooling electricity use and peak electric demand of a building. The visible transmittance of the fenestration, however, controls daylight availability, which can also affect electric lighting requirements. These interactions are illustrated in Figure 2. The lighting system affects electricity use and peak demand through the variation of lighting power density and, if daylighting is being utilized, by the selected lighting control strategy and desired illumination level. However, the lighting system also influences the cooling requirements of a building through the sensible heat gain of the lighting system into the conditioned spaces.

To better understand these interactions, we show in Figure 3 the total electricity consumption for the prototypical office building module located in Los Angeles as a function of the building's window-to-wall ratio. Results are shown for five double-pane glazings (Table 1) with a fixed U-value of 0.55 Btu/h·ft^2·°F (3.13 W/m^2·°C) and varying shading coefficient and visible transmittance levels corresponding to clear insulating glazing (IG) and several tinted IG units as well as a hypothetical highly selective green glazing. Values are shown without daylighting controls. The total electricity consumption includes core and perimeter zone components due to cooling, fan energy, lighting at 1.5 W/ft^2 (16.1 W/m^2), and an internal equipment load of 0.5 W/ft^2 (5.4 W/m^2). The core zone contribution is about 80 MWh, or about 61% of the total electricity consumption of a building without windows.

As expected, electricity use increases almost linearly with increasing window-to-wall ratio. The performance for a particular window size is a function of both the glazing shading coefficient and, to a lesser extent because we are primarily dealing with cooling energy requirements, the glazing conductance. If we define a parameter called the solar aperture (Huang et al. 1989) as the product of the shading coefficient and window-to-wall ratio, we are able to show the incremental electricity consumption due to solar gain (difference between the consumption with windows and the consumption without windows) through the use of a single, nearly linear, curve (Figure 4). Although we did not vary glazing conductance for the five glazings, there is a small residual effect

due to the product of U-value and window-to-wall ratio that accounts for the subtle non-linearity. Peak demand variations with solar aperture also reduce to a single curve. Similar curves can be obtained for each perimeter zone, although the magnitude of electric energy use and the slope of the curve would vary. This is also true if the building configuration was changed through the use of external shading devices, such as overhangs or fins, or if a higher or lower lighting power density was used. In using such a presentation, we are able to define the solar gain performance across a broad spectrum of fenestration system configurations and observe the effect of particular glazings and/or window sizes.

The effect of daylighting on total electricity consumption for the same fenestration systems is presented on Figure 5. The data are for a continuous dimming system at a desired lighting level of 50 footcandles (538 lux). With daylighting, consumption is significantly reduced for all glazing types, and all of the glazings have consumption levels below that of a building configuration without windows for most window-to-wall ratios. Daylighting is best understood by realizing that the perimeter zone electric lighting requirements are directly influenced by the fenestration system's effective daylighting aperture (Johnson et al. 1984), which is the product of the visible transmittance and window-to-wall ratio.

Figure 6 shows the incremental electricity consumption due to daylighting for the data presented on Figure 5 as a function of this effective daylighting aperture. As the effective daylighting aperture increases initially from zero, there is an abrupt reduction in lighting energy use with the continuous dimming system. As the aperture continues to increase, daylight does not contribute significantly to additional lighting energy savings since the 50 fc (538 lux) control setpoint has already been exceeded. As this daylight "saturation" level is approached, the lighting energy use no longer decreases. A similar relationship also exists for peak demand variations with effective daylighting aperture. Perimeter zone lighting consumption can be reduced by close to 73% using daylighting. This corresponds to about 26% of the total building electric lighting for our module since there is no daylighting in the core zone. The saturation level would change if the latitude of the building or its occupancy schedule was changed. As in the case above with solar gain, we have reduced the data to a single performance curve with the effective daylighting aperture as the performance measure.

Optimum performance requires finding the solar and effective daylighting aperture values that minimize energy consumption. We do this by combining the solar gain and daylighting increments presented in Figures 4 and 6 into a composite data set of incremental electricity use contours as a function of the solar and effective daylighting apertures (Figure 7). Figure 7 also shows data points representing the performance of the five specific glazings from Table 1. These values are given for a window-to-wall ratio of 0.5. The variation in glazing performance with window-to-wall ratio is obtained by moving progressively along a straight line away from or toward the origin.

With the composite data presented in Figure 7, we can determine that of the five glazings analyzed, glazings C and D are the best performers. Their visible transmittance is high enough so that useful daylighting occurs and their shading coefficient is low enough so that there is a significant reduction in cooling loads induced by solar gain. Glazing E's energy performance is comparable to that of C and D; however, its visible transmittance is very low, and occupant comfort and view would probably be unsatisfactory under some conditions. Glazing A, which corresponds to a double-pane clear glass, can approach the energy performance level of glazing C and D by reducing the window-to-wall ratio to about 0.15, which may be too small in terms of view and connection with the outdoors.

Superimposed on Figure 7 are values of daylighting efficacy (Arasteh et al. 1985), the ratio of glazing visible transmittance to shading coefficient. Efficacy, Ke, is used as a measure of potential energy performance; however, we see that for fixed efficacy values, performance can vary widely.

A better performance predictor would combine the use of efficacy for low values of effective daylighting aperture, i.e., less than 0.30, or until daylight saturation is reached and then switch to the solar aperture as a predominant measure of performance for larger effective apertures. Prior to daylight saturation, both the solar gain induced electricity consumption and the electricity savings due to daylighting vary with the solar and effective daylighting apertures respectively and efficacy yields useful information on performance. After saturation, however, further reduction in electricity use can only be achieved by reducing the solar aperture.

The effect of window orientation on the magnitude and shape of the incremental energy contours is presented in Figure 8. We show results for the north and south perimeter zones (the east and west zone contours are very similar to the south zone because shade management tends to mitigate the differences). For north-facing windows, which have a small amount of direct solar gain, the contour levels indicate savings (negative incremental energy) for almost all combinations of solar and effective daylighting apertures. South-facing windows follow the trends given in Figure 7 with the zero value of incremental energy occurring at a solar aperture of about 0.3 for moderate to large effective daylighting apertures.

Figure 9 is a plot similar to Figure 7 in which we present performance threshholds for various window sizes as a function of shading coefficient and visible transmittance. The threshold is defined as the combination of values of window-to-wall ratio, shading coefficient, and visible transmittance that yields net zero incremental electricity. For a given window-to-wall ratio, any glazing combination of shading coefficient and visible transmittance that lies below the line will use less energy than an opaque wall; glazings above the line will use more energy than an opaque wall.

Properties of currently available glazing products are also shown on the plot as well as the limit associated with what is technically possible in developing new glazing products. We see that for high values of glazing visible transmittance (>0.6), the increase in threshold window-to-wall ratio is almost directly proportional to decreasing shading coefficient, i.e., the threshold for a window-to-wall ratio of 0.4 occurs at a shading coefficient close to 0.85; for a window-to-wall ratio of 0.7, the shading coefficient is about 0.5. Since the shading coefficients of glazings C and D are low, 0.41 and 0.30, respectively, building configurations employing these types of glazings can have large windows without penalty. The clear glass, represented by glazing A, has a threshold window-to-wall ratio close to 0.4. As the visible transmittance is reduced below 0.4, the threshold window-to-wall ratio is a function of both shading coefficient and visible transmittance, which agrees with the data presented in Figure 7.

We can use this type of information to compare the performance of glazings and to assist in the selection of fenestration and lighting system alternatives. One could also use the information presented in Figures 7, 8, and 9 to optimize the selection of window size, glazings, and lighting systems for a particular building or to guide development of future fenestration technologies. Such charts can be readily developed for other lighting power densities and for each building orientation.

SUMMARY AND CONCLUSIONS

A technique has been developed that facilitates an evaluation of fenestration and lighting system effects on the electric energy performance in commercial office buildings. The method is based on a regression analysis of building energy simulations using the DOE-2 building energy analysis simulation computer program. Cooling energy requirements induced by solar gain were mollified with the use of a continuously dimming daylighting control system that reduced electric lighting. Contours of equal annual incremental energy were shown to be a function of solar aperture and effective daylighting aperture. Such data facilitate the derivation of threshold (zero net electricity use) values of window size, shading coefficient, and visible transmittance as well as the ability to define optimum levels of these same variables. We are extending this research in several directions:

1. Examining the effects of glazing conductance on resultant performance. Although conductance effects are much smaller than solar radiation effects on cooling energy and peak electric demand, the specific contour levels and threshold values would change. The magnitude of this effect will increase as one moves to colder climates.

2. Incorporating heating energy (both fossil fuel and all-electric) effects due to the fenestration and lighting system parameters. We have concentrated on cooling and lighting in this work because of our interest in electric energy and peak demand effects in moderate and warm climates; however, heating is also important in many U.S. locations and will be investigated.

3. Conducting a sensitivity study to isolate the effects of HVAC characteristics on the methods discussed in this report. Results will also be extended to examine the overall cost-effectiveness of these design solutions.

4. Examining the interrelationships among climatic variables, i.e., solar radiation, temperature, and humidity, so that a more generalized procedure can be developed.

5. Developing a mathematical procedure for defining optimum values of fenestration and lighting system variables without the need to rely on nomographs similar to those presented in this report. This computational version is being developed as part of an expert system for envelope and lighting system design.

ACKNOWLEDGMENTS

This research was funded by the California Institute for Energy Efficiency (CIEE), a research unit of the University of California. Additional related support was provided by the Assistant Secretary for Conservation and Renewable Energy, Office of Building Technologies, Building Systems and Materials Division of the U.S. Department of Energy under Contract No. DE-AC03-76SF00098.

REFERENCES

Arasteh, D., R. Johnson, S. Selkowitz, and D. Connell. 1985. Cooling energy and cost savings with daylighting in a hot and humid climate. Proceedings of the second annual symposium on improving building energy efficiency in hot and humid climates, September 1985, Texas A&M University, and Lawrence Berkeley Laboratory Report LBL-19734.

CEC. 1990. Energy efficiency report. California Energy Commission Report P400-90-003.

Johnson, R., R. Sullivan, S. Selkowitz, S. Nozaki, C. Conner, and D. Arasteh. 1984. Glazing energy performance and design optimization with daylighting. Proceedings of the international daylighting conference, February 1983, Phoenix, AZ, and Lawrence Berkeley Laboratory Report LBL-15625.

Huang, Y.J., B. Thom, and B. Ramadan. 1989. A daylighting design tool for Singapore based on DOE-2.1C simulations. Proceedings of the ASEAN special session of the ASHRAE Far East conference on air-conditioning in hot climates, Kuala Lumpur, and Lawrence Berkeley Laboratory Report LBL-28639.

SRG (Simulation Research Group). 1989. DOE-2 supplement, version 2.1D. Lawrence Berkeley Laboratory Report LBL-8706, Rev. 5 Suppl.

Sullivan, R., D. Arasteh, K. Papamichael, J.J. Kim, R. Johnson, S. Selkowitz, and R. McCluney. 1988. An indices approach for evaluating the performance of fenestration systems in nonresidential buildings. ASHRAE Transactions 94(2) and Lawrence Berkeley Laboratory Report LBL-23581.

Sullivan, R., S. Nozaki, R. Johnson, and S. Selkowitz. 1985. Commercial building energy performance analysis using multiple regression. ASHRAE Transactions 91(2) and Lawrence Berkeley Laboratory Report LBL-16645.

TABLE 1

Glazing Parameters Used in the DOE-2 Simulation Study

Glazing		SC	Tvis	Ke=Tvis/SC
A	Clear IG	0.82	0.78	0.95
B	Tinted IG (Bronze)	0.60	0.61	1.02
C	Tinted IG (Green)	0.41	0.53	1.29
D	(Hypothetical Highly Selective)	0.30	0.60	2.00
E	Reflective IG (Bronze)	0.20	0.10	0.50

Note: Glazing U-value fixed at 0.55 Btu/h·ft^2·°F (3.13 W/m^2·C).

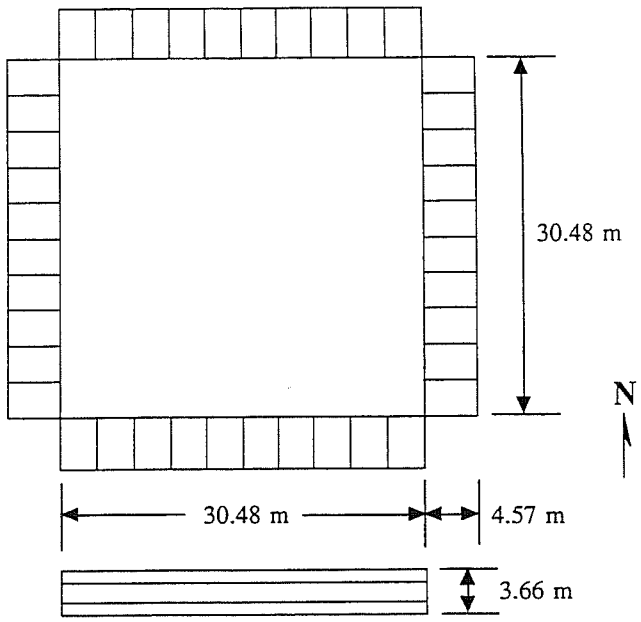

Figure 1. Elevation and plan view of the prototypical commercial office building module used in the study. The building module has four perimeter zones consisting of ten offices, each 15ft (4.57m) deep by 10ft (3.05m) wide, surrounding a central core zone of 10,000 ft^2 (929 m^2) floor area.

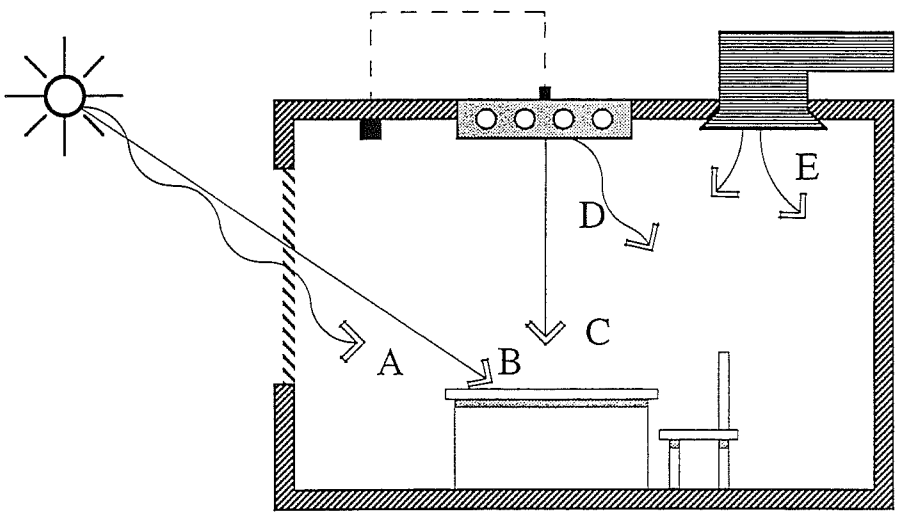

A. Solar Heat Gains
B. Daylight Availability
C. Electric Lighting
D. Heat Gains from Lights
E. Mechanical Cooling

Figure 2. Schematic diagram showing the interaction between the fenestration and lighting systems of a building. The fenestration system's orientation, size, and shading characteristics modify solar gain and thus affect the cooling electricity use and peak electric demand of a building. The visible transmittance of the fenestration, however, controls daylight availability, which can also affect electric lighting requirements.

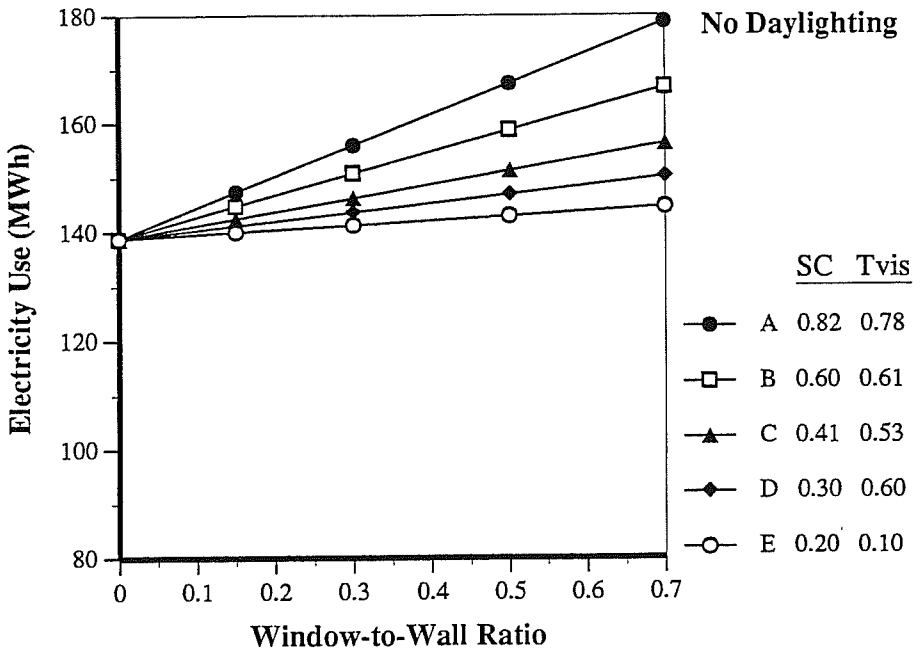

Figure 3. Total annual electricity consumption for a prototypical commercial office building module in Los Angeles as a function of window-to-wall ratio. The data show the performance of glazings with varying shading coefficients and visible transmittances and a fixed U-value of 0.55 Btu/hr-ft^{2}F (3.13 W/m^{2}C) without the use of daylighting. 100 MWh is equivalent to 6.25 kWh/ft^2 (67.3 kWh/m^2) for our building module configuration perimeter 6,000 ft^2 (557.4 m^2) and core zone 10,000 ft^2 (929 m^2) floor areas.

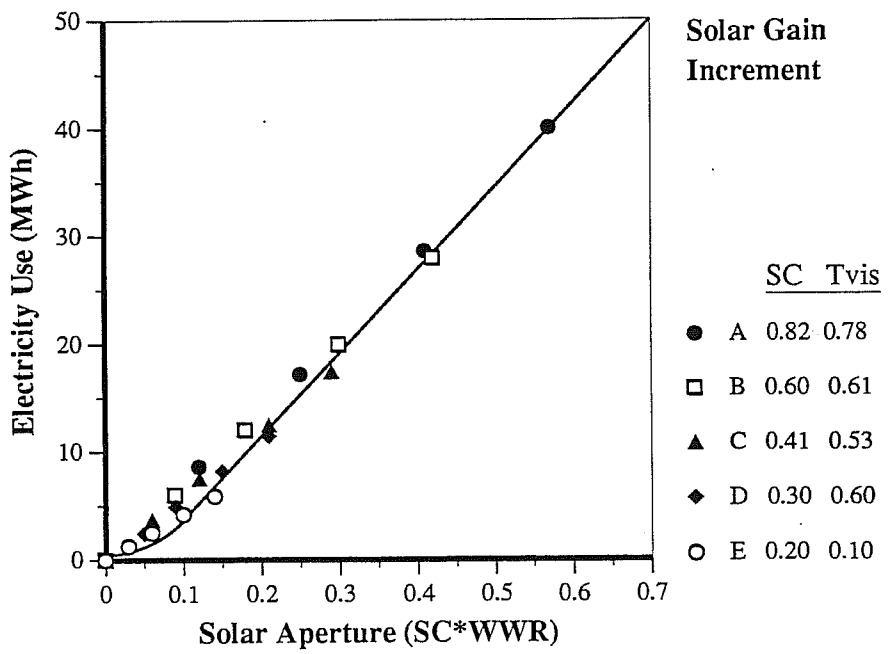

Figure 4. Incremental annual electricity consumption for a prototypical commercial office building module in Los Angeles as a function of solar aperture, which is the product of shading coefficient and window-to-wall ratio. The data show the performance of glazings with varying shading coefficients and visible transmittances and a fixed U-value of 0.55 Btu/hr-ft^{2}F (3.13 W/m^{2}C) without the use of daylighting. 10 MWh is equivalent to 1.7 kWh/ft^2 (0.15 kWh/m^2) for our building module configuration perimeter 6,000 ft^2 (557.4 m^2) zone floor area.

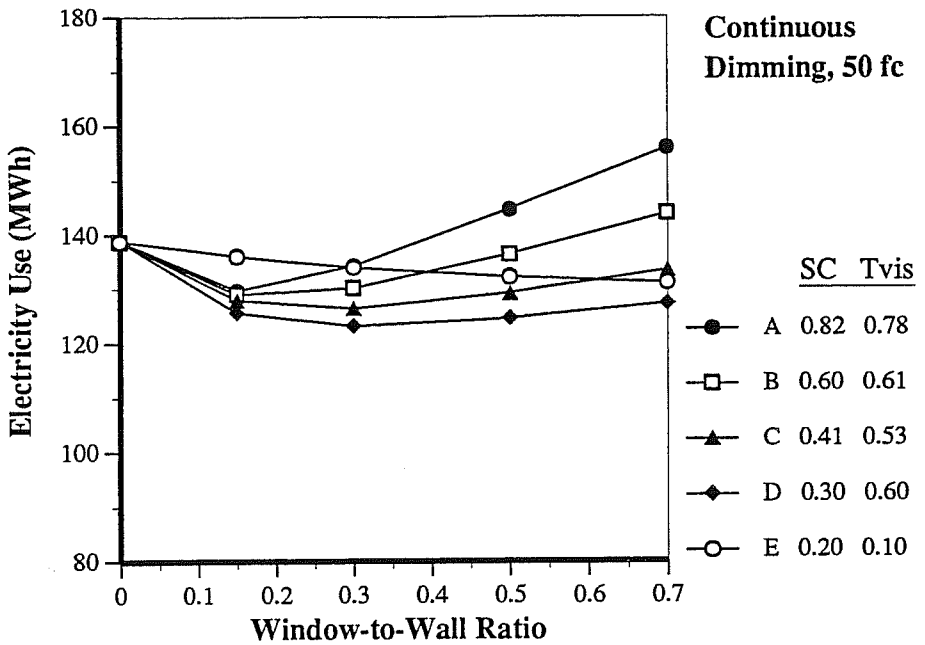

Figure 5. Total annual electricity consumption for a prototypical commercial office building module in Los Angeles as a function of window-to-wall ratio. The data show the performance of glazings with varying shading coefficients and visible transmittances and a fixed U-value of 0.55 Btu/hr-ft^{2}F (3.13 W/m^{2}C) with the use of a continuous daylighting strategy at a desired lighting level of 50 footcandles (538 lux) and a lighting power density of 1.5 W/ft^2 (16.1 W/m^2). 100 MWh is equivalent to 6.25 kWh/ft^2 (67.3 kWh/m^2) for our building module configuration perimeter 6,000 ft^2 (557.4 m^2) and core zone 10,000 ft^2 (929 m^2) floor areas.

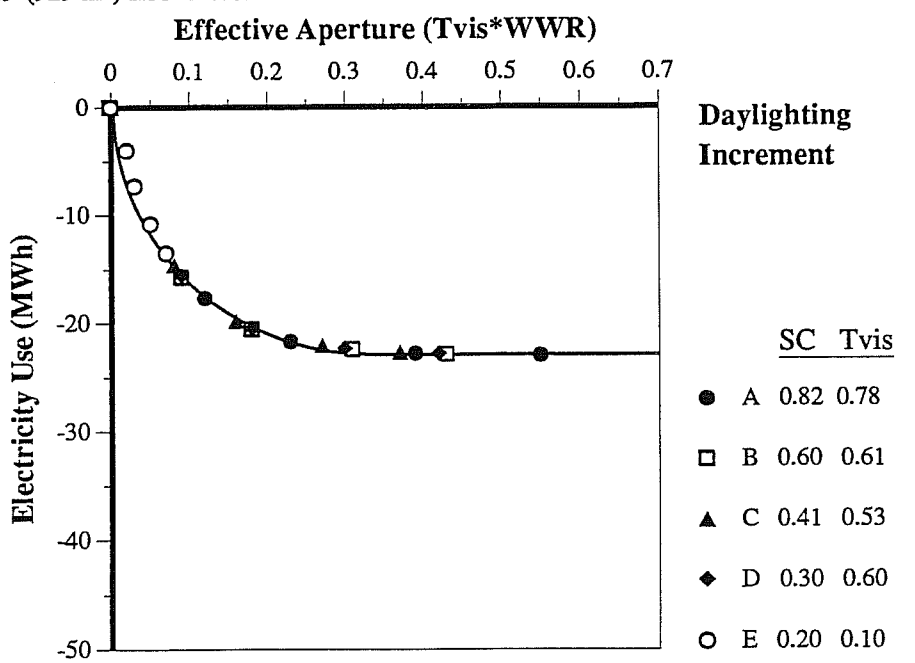

Figure 6. Incremental annual electricity consumption for a prototypical commercial office building module in Los Angeles as a function of effective daylighting aperture, which is a product of visible transmittance and window-to-wall ratio. The data show the performance of glazings with varying shading coefficients and visible transmittances and a fixed U-value of 0.55 Btu/hr-ft^{2}F (3.13 W/m^{2}C) with the use of a continuous daylighting strategy at a desired lighting level of 50 footcandles (538 lux) and a lighting power density of 1.5 W/ft^2 (16.1 W/m^2). 10 MWh is equivalent to 1.7 kWh/ft^2 (0.15 kWh/m^2) for our building module configuration perimeter 6,000 ft^2 (557.4 m^2) zone floor area.

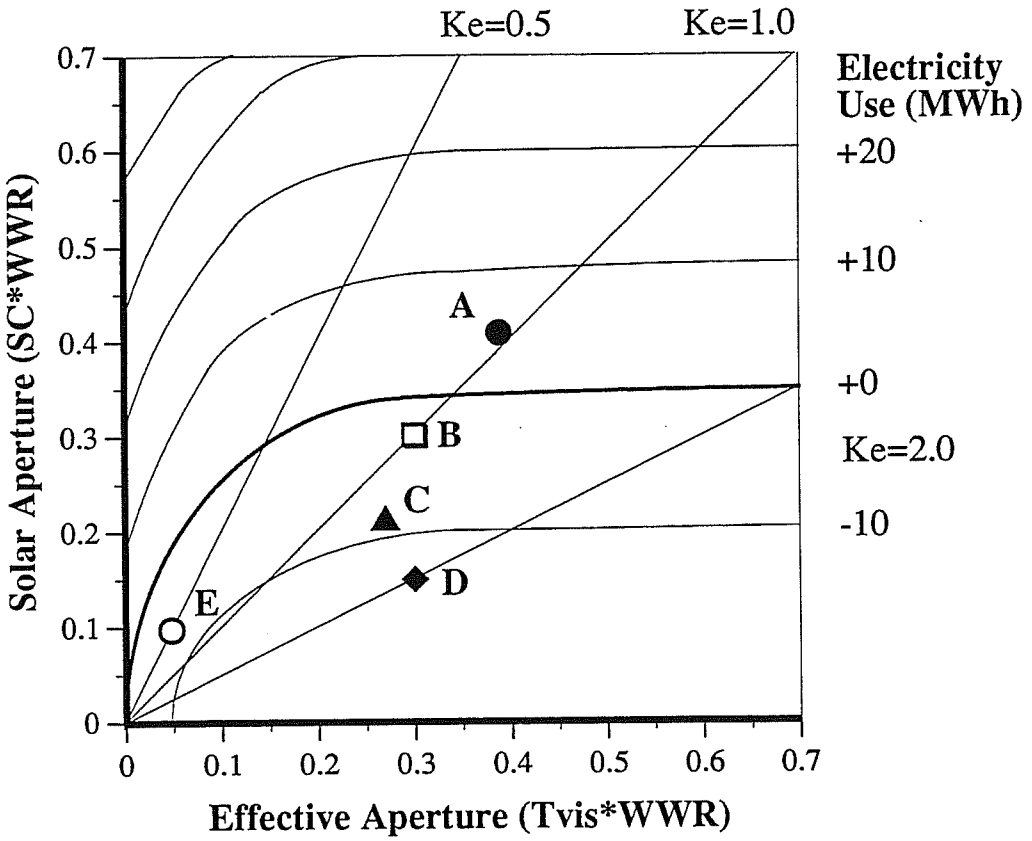

Figure 7. Contours of expected incremental annual electricity usage (MWh) as a function of solar aperture and effective daylighting aperture for a prototypical commercial office building module in Los Angeles. Glazing efficacy (Ke) and solar (SC*WWR) and effective aperture (Tvis*WWR) values of the five sample glazings used in our analysis at a window-to-wall ratio of 0.5 are shown. 10 MWh is equivalent to 1.7 kWh/ft^2 (0.15 kWh/m^2) for our building module configuration perimeter 6,000 ft^2 (557.4 m^2) zone floor area.

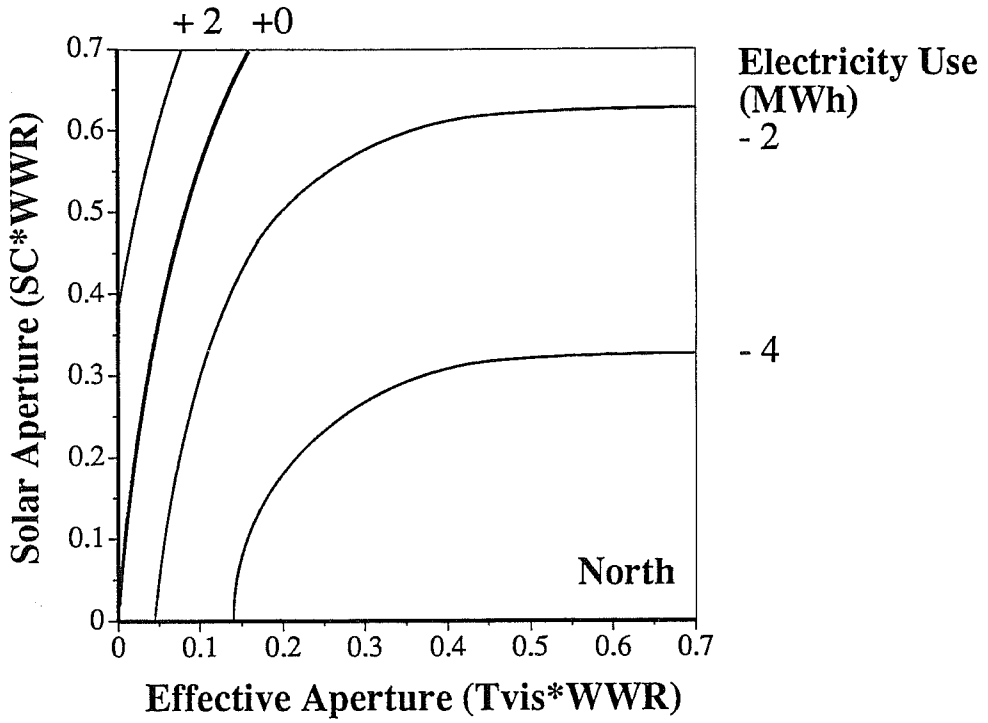

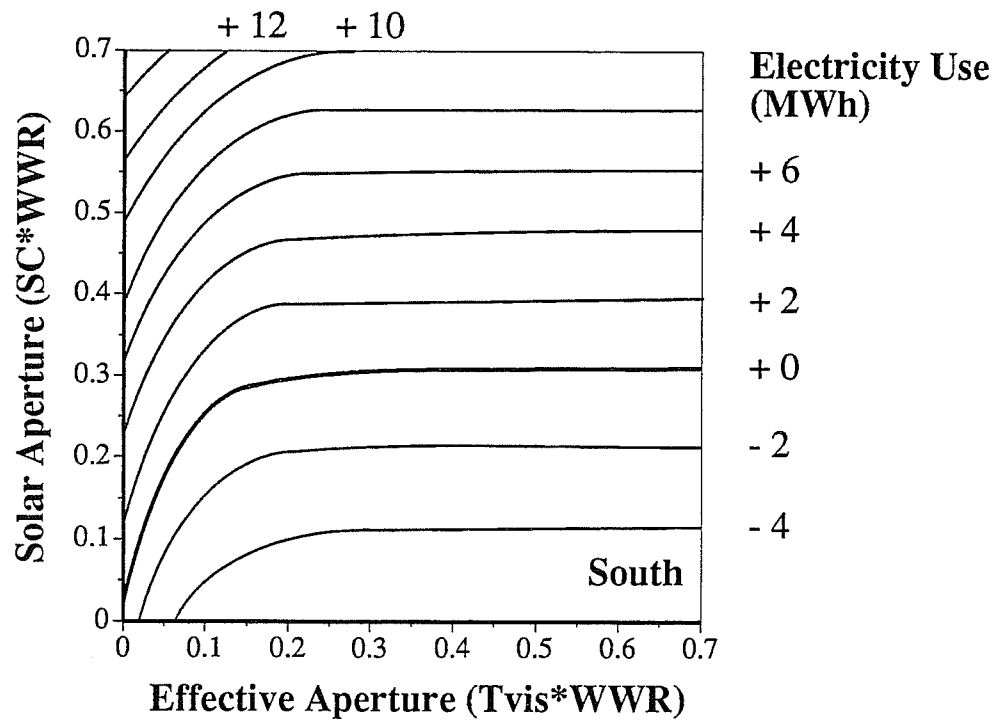

Figure 8. Contours of expected incremental annual electricity usage (MWh) as a function of solar aperture and effective daylighting aperture for north and south perimeter zones of a prototypical commercial office building module in Los Angeles. 10 MWh is equivalent to 1.7 kWh/ft^2 (0.15 kWh/m^2) for our building module configuration perimeter 6,000 ft^2 (557.4 m^2) zone floor area.

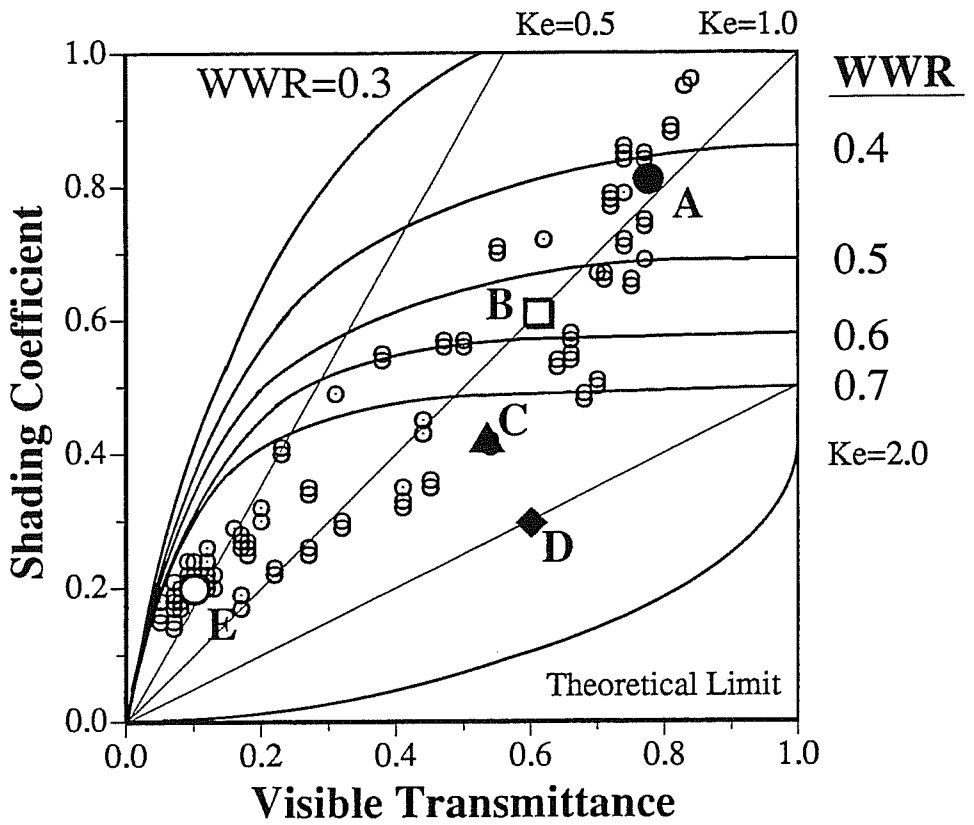

Figure 9. Threshholds for various window sizes as a function of shading coefficient and visible transmittance. The threshold is defined as the combination of values of window-to-wall ratio, shading coefficient, and visible transmittance that yields net zero incremental electricity. Glazing efficacy (Ke) and solar (SC*WWR) and effective aperture (Tvis*WWR) values of the five sample glazings used in our analysis are shown.