LBL-33202

This research is part of "Envelope and Lighting Technology to Reduce Electric Demand", a multiyear research project for the California Institute for Energy Efficiency, University of California.

TECHNOLOGY REVIEWS
DYNAMIC CURTAIN WALL SYSTEMS

J. Schuman, F. Rubinstein, K. Papamichael, L. Beltrán, E.S. Lee, and S. Selkowitz

Windows and Daylighting Group
Energy and Environment Division
Lawrence Berkeley Laboratory
University of California
Berkeley, CA 94720

September 1992

This research was funded by the California Institute for Energy Efficiency (CIEE), a research unit of the University of California. Publication of research results does not imply CIEE endorsement of or agreement with these findings, nor that of any CIEE sponsor. Additional related support was provided by the Assistant Secretary for Conservation and Renewable Energy, Office of Building Technologies, Building Systems and Materials Division of the U.S. Department of Energy under Contract No. DE-AC03-76SF00098.

DISCLAIMER

This collection of technology reviews is considered to be a "growing" document and contains incomplete information. It is intended to serve the project needs throughout its duration, with revisions and additions inevitable throughout the life of this project. Information in this document may include opinions, conjecture, and other unverified data. Information here comes from a variety of sources and therefore may vary in quality and reliability.

We caution readers of this report to exercise caution when using any information contained herein.

TECHNOLOGY REVIEWS : DYNAMIC CURTAIN WALL SYSTEMS

J. Schuman, F. Rubinstein, K. Papamichael, L. Beltrán, E.S. Lee, and S. Selkowitz

Windows and Daylighting Group
Energy and Environment Division
Lawrence Berkeley Laboratory
University of California
Berkeley, CA 94720

Executive Summary

We present a representative review of existing, emerging, and future technology options in each of five hardware and systems areas in envelope and lighting technologies: lighting systems, glazing systems, shading systems, daylighting optical systems, and dynamic curtain wall systems. The term *technology* is used here to describe any design choice for energy efficiency, ranging from individual components to more complex systems to general design strategies.

The purpose of this task is to characterize the state of the art in envelope and lighting technologies in order to identify those with promise for advanced integrated systems, with an emphasis on California commercial buildings. For each technology category, the following activities have been attempted to the extent possible:

- Identify key performance characteristics and criteria for each technology.
- Determine the performance range of available technologies.
- Identify the most promising technologies and promising trends in technology advances.
- Examine market forces and market trends.
- Develop a continuously growing in-house database to be used throughout the project.

A variety of information sources have been used in these technology characterizations, including miscellaneous periodicals, manufacturer catalogs and cut sheets, other research documents, and data from previous computer simulations. We include these different sources in order to best show the type and variety of data available, however publication here does not imply our guarantee of these data. Within each category, several broad classes are identified, and within each class we examine the generic individual technologies that fall into that class. Each technology section has the following format:

I. TITLE PAGE & CONTENTS

II. SUMMARIES

- Summary descriptions for each technology.
- Summary table(s) showing comparative performance characteristics or other comparative information.
- Brief discussion/summary of the most promising technologies and trends in this category. Emphasis is on electricity peak reduction and on potential for integration with other systems or technologies.
- List of product brand names for each sub-category.

III. DATA ENTRY FOR EACH TECHNOLOGY

Each sample technology is characterized through one or more of the following. Sections may deviate as required:

- Description
- Sources
- Status of availability
- Pros and con
- Energy performance
- Comfort performance
- Impact on building design
- Cost, per unit basis
- Life cycle cost economics
- Market share, expected trends
- Case study installations

IV. REFERENCES

OVERVIEW

Components of dynamic wall systems that are discussed in other sections:

- Switchable and Directional glazings: see Glazing Systems.
- Motorized Shading Devices: see Shading Systems.
- Dynamic Sunlight Collection, Transport and Redirection: see Daylighting Optical Systems.
- Systems that convert solar energy into space heating: see Glazing Systems/ Transparent Insulating Materials.

This review addresses a technology area of interest for the future. Current systems falling into the category of dynamic envelopes are rare, of unknown cost effectiveness on a general basis, and probably most useful in climates harsher than in California. However, the concept of a dynamic envelope holds great promise for building optimization and perhaps even for a zero energy building perimeter. Future building technology developments are likely to include systems in this category, potentially leading to cost effect integrated systems that include the building skin as well as internal building systems. This technology section discusses rationale behind development of a dynamic building skin and presents the few existing examples in this category.

Building envelope design to date has addressed the combination of various materials and components to produce a building skin that will act primarily as a static barrier to the extremities of the climate outside the envelope. This is in contrast to the dynamic behavior of an analogous system, our own skin. In the human body, the interface between internal and external environments is dynamically controlled through the complex interactions between the internal loads of the body, the thermal resistance of the clothing, and the conditions of the external environment such as air temperature, mean radiant temperature, air velocity and vapor pressure. Human beings have several means at their disposal to modify their comfort conditions, either through conscious thermo-regulatory control (e.g., removing clothing layers or changing locations) and/or through involuntary responses (e.g., sweat secretion or vasoconstriction). Our ability to dynamically use a variety of regulatory tools enables us to survive through a wide range of adverse conditions.

Because buildings are subjected to an even wider range of internal and external conditions, with the additional handicap of being unable to relocate themselves to more favorable environments, they too should ideally possess dynamic thermo-regulatory capabilities. Although undoubtedly at a lesser level of control than in the human body, dynamic qualities of a building envelope would yield improved thermal comfort to its occupants while minimizing the costs of maintaining that comfort. The future design of building envelopes should ultimately address a careful balance between internal loads, HVAC system, design and materials of the building skin, and the external environment. This new model for the interface between inside and outside, including a dynamic building envelope, allows consideration for optimal building performance under changing conditions and conflicting criteria. For example, a dynamic skin might be able to respond to an increase in solar heat gain by altering its thermal conductance, by operating a series of shading devices or altering glazing properties, and by converting incident solar radiation into electricity for use in other parts of the building, all in coordination with the HVAC and lighting systems to balance the additional load while meeting cooling and illumination requirements.

Three levels of wall technology are currently under consideration in the development of fully dynamic systems:

- Building envelope components are being designed to operate actively and dynamically.
  New building materials are being developed with the capacity to change thermophysical properties (such as thermal conductivity), optical properties (absorptivity, reflectivity, and transmissivity within a range of various wavelengths), and visual appearance (such as opacity and transparency). New and emerging components include switchable and directional glazings, motorized shading devices, and light tracking devices.

- The building envelope is being envisioned as a major building system within which these components will be integrated for maximum efficiency.
  Wall systems such as double envelopes and air and water flow envelopes fit in this category. Other systems where components are modular elements within a total envelope package have yet to be developed.

- The components and their infrastructure will ultimately be linked to an intelligent building energy management control system (EMCS), for a set of hardware and software functionally analogous to the human thermo-regulatory system.

Clearly the concept of a dynamic envelope holds potential to captivate the architectural imagination, however the well-established traditions of building design may need to be substantially modified before these advanced systems become implemented. There are formidable obstacles to overcome in the development and use of innovative building systems across all sectors in the design, development, manufacturing and construction industries. For example, economic concerns are a major driving force in all building decisions, and often intricate sophisticated systems are replaced by cheaper less dynamic systems when costs need to be reduced. The infrastructure of the building construction industry can also make the implementation of complicated building systems uneconomical. Integrated systems often require coordination between building trades, which in turn, involves a longer construction time. In addition, contingency fees taken by each trade involved to cover the perceived risks associated with new or complex systems further increases construction costs. Higher levels of maintenance may be required for complex systems, as well as more skilled tradesmen, and the widely prevalent attitude among these sectors of the-simpler-the-better may prevail. Flexibility in building use and operation is also required given the high turnover rates typical in commercial properties. The building may undergo several changes in types and sizes of occupancy which inherently involves total renovations of parts of the building. In cases where more than one occupancy resides in one building, the building may need to provide different responses at different periods of the day. It is not clear yet whether dynamic envelopes will ease or hinder renovations.

In addition to the interest in building systems that reduce energy use and peak demand, dynamic building envelopes may be justified if they improve thermal and visual comfort in buildings and thereby contribute to improved occupant satisfaction and productivity. These envelope system will obviously not resolve all the issues associated with physiological and psychological comfort in office buildings. They do, however, offer more options than traditional envelopes and therefore offer greater potential for improvement at all levels of building performance.

In terms of comfort, the envelope systems described in this section primarily address the problem of an asymmetric radiant field, with respect to an office occupant, created by the cold or hot surfaces of windows and by direct solar gain. The asymmetry can be eliminated by blocking solar gain and be warming or cooling the surface of the window. Two types of envelope systems have been developed to address this problem.

The first system involves a double-glazed skin with conditioned air circulated in the gap. This can be implemented on a per window basis or as a whole-building system. At the whole-building scale, conditioned air circulating through the envelope can be used to redistribute heat among the facades of the building, for example to use air heated on the south to warm up the north facade. These systems are called **air flow windows** and **double envelope systems,** respectively. For these systems, design issues similar to an air distribution mechanical system must be resolved, e.g. the optimum air change rate, minimum airflow volume necessary to raise the glass surface temperature, and the conditions of supply and return.

The second system uses the window mullions, structure of the window or other fenestration structural elements as the channel for circulation of conditioned air or water. Design and implementation of **air or water flow grids** is very similar to a radiator system, with additional concerns of envelope structural integrity with respect to corrosion, condensation on the window plane, uniformity of the temperature

distribution between the profile and the glazed area, and insulation of the outward facing surface of the window gridwork.

In addition to balancing asymmetric radiant fields, these systems have the potential to act as sources of heating or cooling. Air warmed by solar gain on one side of the building may be circulated to heat other cooler spaces in the building. Peak cooling demand reductions may be achieved through air circulation at night to thermal storage areas and recirculation during the day.

Implementation of these systems poses no insurmountable problems for construction, as evidenced by their use in Europe. Air flow windows may come as packaged units, but still require coordination with the mechanical system. Water systems may be isolated per room, as with radiators, where individual shut-off valves and flow regulators may be placed in each space. Avoiding the associated radiator jackhammering problem requires careful design. In addition, integration with other envelope devices must also be addressed. Light shelves, exterior shading devices, and motorized shading devices mounted between the glass panes will add concerns about proper interaction between the two systems and serviceability.

In terms of the appearance of the building, the air flow windows and the air or water flow through the window framing have minimal impact. The double envelope system can present larger discernable affects depending on the width of the interstitial space. Some case studies presented in architectural journals have included discussion of this affect in terms of design aesthetics and the potential to use such an affect for particular expression.

Air flow window systems have been implemented in over 100 Scandinavian and Central European buildings, predominantly offices. Several buildings in the United States have also used them, including a 1980 office building in Portland, Oregon. Performance data in terms of thermal comfort responses from occupants and energy efficiency for these buildings are spotty and inconclusive. Typically, these systems have been studied in cold climates. Further study is needed to determine the appropriateness of these systems in the milder climates of California.

The solar control function is typically performed by blinds or louvers, between the glazings of the window system, or within the interstitial space in a double envelope system. With the future development of newer glazings with dynamic transmission control inherent to the glazing itself, the principle reason for these envelope systems (the asymmetric radiant field created by traditional windows) may be reduced or eliminated. Still, the potential for the double envelope system to act as a solar collection device deserves a second look, although, in California, heating is typically not a large component of the total building electric load. For these milder climates, the concept of night cooling and cold air storage during off peak night hours seems to have more potential for energy savings. Double envelope systems have been employed as "air ducts" for this purpose, but there is little available performance data on such systems.

These systems add cost to the envelope compared to conventional window technology. But when a building systems perspective is applied, savings in ducts and chiller capacity may balance some or all of the apparent increased first cost. Regardless of economic costs, specification and successful implementation of such a system will require extra attention throughout the design process to ensure that the various design professionals are appropriately coordinated in their efforts.

Energy management and control systems

Dynamic envelope systems, to be successfully implemented, will require the simultaneous development of the "intelligent" building concept. The general notion of "intelligent buildings" is increasingly discussed in the building sector but it has many different interpretations. Its most general application today is to buildings in which a central control system can take in a variety of inputs from sensors, process them and react real time with the most appropriate building response. Lighting control systems pre-programmed to occupant schedules or actively controlled by occupancy sensors, fire management systems, and security systems are fairly prevalent in today's market. These building automation and control systems generally

involve three types of components. The first are sensors with which to collect and deliver to the central computer the various data at zones within the building. The second is the black box algorithms that accept the data, process it, and send out an appropriate response. The final component is the activation devices that, upon receiving the response from the central control, will mechanically produce the desired results. A building security system has a fairly simple algorithm to guard against intrusions. Sensors with various capabilities (motion, noise, and changes in temperature) send a signal warning of intrusion to the central control point which may be programmed to call the security guard, set off an alarm, and turn on exterior lights.

Energy management systems are only occasionally integrated into "intelligent buildings." They present a more complex operational problem because of the many variables associated with a "correct" response. An algorithm to minimize energy use or peak demand must balance factors such as the weather conditions at the site, occupant activities and comfort, peak demand billing schedules from utility companies, and mechanical system efficiencies to produce the optimum economic, physiological, and psychological building configuration. The networks of sensors, analysis devices, and controllers must be properly designed, installed, calibrated and maintained, which presents a challenge given our current technology and knowledge base regarding building operation.

Cost effective solutions to these problems will take time to achieve. Current development towards better operating algorithms draws on techniques from the field of artificial intelligence. A new system of artificial neural networks (ANNs) which mimic the learning processes of the human brain may be used to automatically update energy consumption predictors. Instead of coding many rules and mathematical routines, ANNs are able to remember the key information patterns within a multidimensional information domain and respond flexibly to changing needs. Some difficulties stem from the lack of standardized interfaces and communications protocols which lock specifiers into purchasing all components from a single vendor.

The confluence of building products on the marketplace today are already pointing to a second generation of design parameters. A communication protocol between various EMCS must be set for compatibility between systems. A hardware/software environment where information can flow efficiently between devices made by different manufacturers will be the key to full integrated building systems.

DETAILED DATA SHEETS
AIR FLOW WINDOWS

DESCRIPTION

Conditioned air is circulated between two or more glazing layers in order to reduce energy gains and losses, and to balance the asymmetric radiant field caused by solar gain and cold window surfaces.

The air flow window is typically composed of an operable single pane interior sash and a second double or triple pane exterior sash, depending on the climate. Air is forced between the two sashes to warm or cool the interior window surface. Thermal breaks and tight seals minimize heat loss through the second sash and the air injection slit typically directs air towards the outer sash to prevent condensation. Operable venetian blinds may be located in the air cavity. In addition to providing glare control and privacy, these help modulate transmitted light and solar heat gain.

With an *exhaust air window* the room air is forced between the window panes and then is exhausted to the outside. A *supply air window* takes outside air through the window panes into the room. *Extract air windows* is where room air is taken in through the bottom of the window, forced up between the window panes, and returned via a duct system at the top of the window to the central HVAC system, thus acting as a return-air duct system. These window types are most prevalent.

SOURCES AND STATUS OF AVAILABILITY

Airflow windows are typically custom made. The Ekono Window Company provides the only commercially available airflow windows (AIR CURTAIN™) in metal or wood construction of various sizes, shapes, and finishes. Other European companies, CARDA and ProtectaSol, have not found success in the U.S. market.

PROS AND CONS

Airflow windows are most suitable for large commercial buildings in extreme climates that are designed with large window areas. For smaller office buildings or less extreme climates, the supply air window system may still be an economical choice through reduction of peak load consumption. Cold air circulated through thermal storage at night may be recirculated during peak cooling hours during the day.

Air flow windows require a connection to the return air system. Pressurization patterns must be designed to produce the appropriate air flow at all windows. Separate return air systems may be necessary for the south and west zones of the building to avoid adding an additional unwanted cooling load on the system during cooling periods.

A fairly sophisticated control system is needed to optimize performance. Schedules and temperature triggers must be determined for zoning the building and determining when to use various HVAC options such as the heat recovery and rejection systems, thermal storage, exhaust air and return air.

ENERGY PERFORMANCE

Data from numerous structures built and observed in more extreme climates than California seem to indicate that energy consumption is 20 to 50% less than for buildings with ordinary windows.

The airflow window can lower the shading coefficient of the glass, if venetian blinds are used, by removing the heat radiating from the blinds. Of the total incident solar radiation on an airflow assembly with venetian blinds, 33% is purported to be reflected from the glass and the blinds or absorbed and reradiated out, 50% is transferred to the duct air, and 17% is directly transmitted or absorbed and reradiated into the space.

Lab tests have shown that 10 m^3/m^2-hour is a minimum airflow volume to sufficiently warm the glass surface temperature, or 15 to 50 m^3/hour of exhaust air per square meter of window area depending on the desired winter or summer heat protection and the design of the window. Higher airflow rates improve heat protection in the summer, while higher airflow rates in the winter improve heat recovery but reduce thermal comfort. Other factors that affect performance are the height of the window the pane distance and the direction of the airflow (up or down).

COMFORT PERFORMANCE
The airflow window reduces the downdraft convective currents that typically occur at the surface of the window and balances the asymmetric radiant field. Thermal comfort is greatly improved during periods where there are large temperature differences between the interior and exterior environment, and when direct solar gain is present.

IMPACT ON BUILDING DESIGN
The use of air flow windows requires an integrated design in which the envelope and HVAC systems are designed jointly. The appearance of the window is dependent on the width of the air slot between the two window sashes; 1/2" is typical for systems without venetian blinds, 3/8" to 3/4" is typical with a between-the-panes shading system. Dust and dirt deposition on the inside surface of the glass may be removed is the internal sash is operable. Integration with other building elements that may penetrate the window surface, such as a light shelf, may need careful detailing or may not be possible.

COST AND LIFE CYCLE COST ECONOMICS
Airflow windows have a significantly higher initial cost because they are typically custom made, have two separate sashes, and require additional air ducting. These costs may be offset by a reduction in the size of the central HVAC system, by reduction HVAC distribution components (including potentially a complete elimination of all perimeter heating), and a reduction in the number of lighting fixtures needed in cases where the benefits of a reduced shading coefficient lead to a choice of glass that has a higher transmittance value. For large office buildings and extreme climates, the payback is claimed to be within 2 to 5 years. If savings due to a reduced HVAC system costs are included, there may be no net increase in first cost.

MARKET SHARE AND EXPECTED TRENDS
The airflow windows have not achieved a significant market presence in the U.S.. These systems might prove to be cost effective in extreme heating or cooling climates found in some California locations, e.g. severe desert conditions.

CASE STUDY INSTALLATIONS

Office Building, Portland, Oregon.
A 1980 retrofit office building with a heat recovery system, electrically operated dampers for north, south, east and west zones, and daylight controlled indirect ambient lighting. A 50% savings was predicted over the monitored energy consumption of three floors of the same building without airflow windows and daylight controlled lighting.

Office Building, Pittsburgh, Pennsylvania.
A 175 ksq.ft. (gross) office building with return air mode airflow windows and large areas of east-west glazing. The building was projected to save $500,000 (1984S) in HVAC system first costs, thus ambitiously claiming to provide instantaneous payback. Energy use was expected to be 40 kBtu/sq.ft.(net)-year comparable to the existing 117 kBtu/sq.ft.-year.

Office Building, Madison, New Jersey.
A 153 ksq.ft. office building with floor-to-ceiling window walls at the south facade, airflow windows, and a VAV fan induction thermal system. Design optimization was achieved through the analysis of energy consumption and costs using the DOE-2 simulation program. Energy use was projected to be 36.6 kBtu/sq.ft.-year.

Actual building costs and energy operating data for these systems are not available. The reader is cautioned to always view unverified performance predictions with some skepticism.

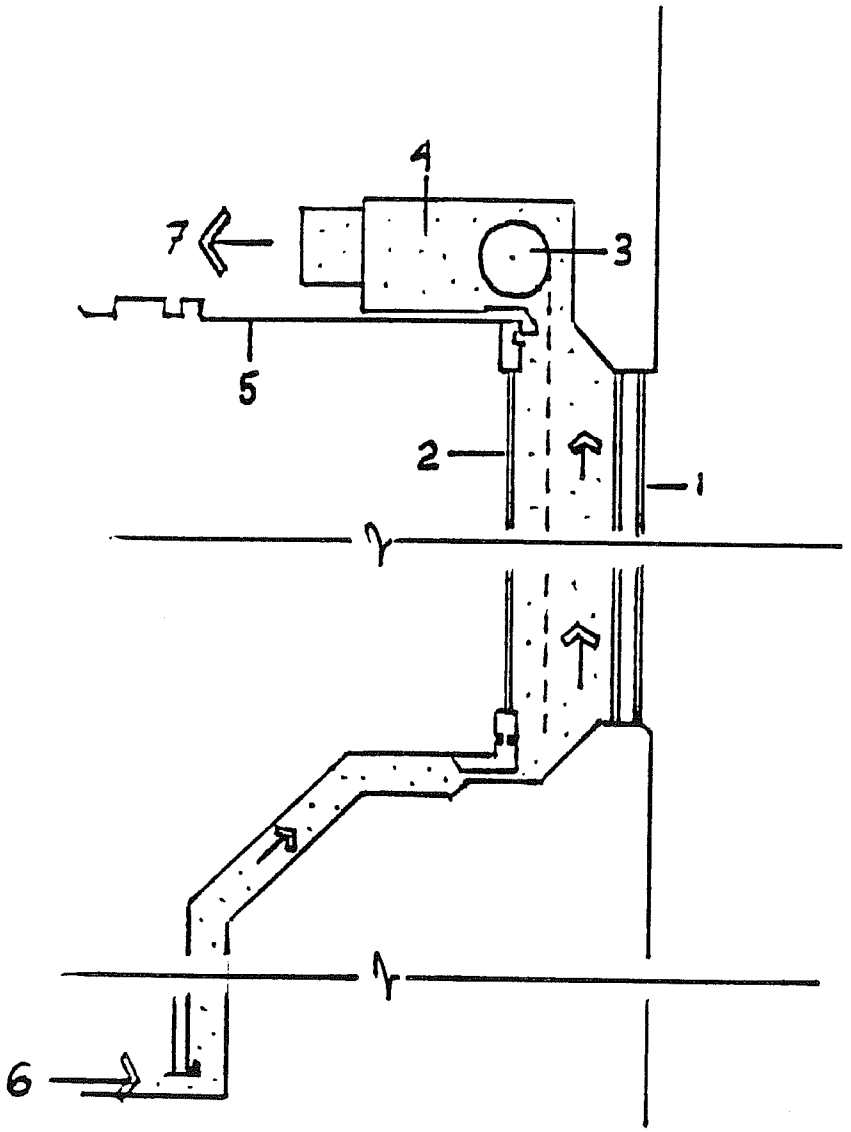

Legend:
1. Exterior double glazing.
2. Interior single glazing.
3. Roller blind for sun and glare protection.
4. Exhaust air box.
5. Suspended ceiling.
6. Air intake.
7. Exhaust air.

Figure 1. Section of the airflow window

DOUBLE ENVELOPE SYSTEMS

DESCRIPTION
These systems are similar in principle to the airflow window but operate at the whole building scale, where conditioned air is forced between an inner wall consisting of clear glazing and a second glass curtain wall consisting of a clear or sun control glazing. The width of the interstitial space varies depending on what services are run between the space. Operable shading systems, vertical HVAC supplies and returns, and other building services may enlarge the air space up to or even greater than four feet. The double envelope system hence may require more coordination between building trades due to its vertical versus horizontal construction. Placing services in the vertical space may also permit reduction in floor-to-floor height. The double envelope system can be used as a solar collection device in which heat from the south side may be circulated to other heat deficient zones of the building.

SOURCES AND STATUS OF AVAILABILITY
The double envelope system is typically custom made from off-the-shelf curtain wall components. Structural connections to the inner skin must be custom engineered. HVAC design of dampers and controls must also be custom designed similar in method to the air flow windows.

PROS AND CONS
The double envelope system is a solution primarily intended for extreme cold climates but might also find application in hot climates. The system offers some advantage over airflow windows in terms of flexibility and serviceability on a larger scale. The height of the air space for buildings larger than 2 to 3 stories may cause some thermal stratification and the space may need to be divided into horizontal sections. Zoning and dampers for fire and smoke control may also be needed.

ENERGY PERFORMANCE
Similar to the airflow window. Heat recovery systems may be used and will result in additional savings. However, the potential value of these savings in California, which is typically not a heating dominated climate, is unclear.

COMFORT PERFORMANCE
Similar to the airflow window.

IMPACT ON BUILDING DESIGN
Double envelope systems clearly have a larger impact on appearance than airflow windows, particularly as the width of the interstitial space grows. The building may take on a more "services-oriented" or other "high tech" appearance, depending on the amount of HVAC and piping that is run through the space and is visible from the outside. Architectural journals present this as an issue of design aesthetics.

COST AND LIFE CYCLE COST ECONOMICS
Similar to the airflow window. The cost of the additional curtain wall on all four sides of the building, the additional engineering, labor and material costs may be offset by a reduction in HVAC equipment and number of lighting fixtures. This system may not be cost effective in mild climates in California.

MARKET SHARE AND EXPECTED TRENDS
Similar to the airflow window. There are several double envelope buildings constructed in Scandinavia, England, and Germany and the trend seems to be increasing. The United States has a limited number of buildings of this type.

CASE STUDY INSTALLATIONS

Occidental Chemical Center, Niagara Falls, New York.
A 200 ksq.ft. retrofitted office building with unobstructed access to sunlight. A four foot interstitial space houses motorized venetian blinds on four separate facades that vary independently. Design predictions indicated a 98% reduction in heating load and a 81% reduction in cooling load of a conventional office building. Energy analysis after installation seems to indicate energy consumption that is 10 to 15% below design predictions (Stubbs and Gordon 1989). Actual building costs and energy operating data for these systems are not available. The reader is cautioned to always view unverified performance predictions with some skepticism.

Lloyd's of London
No energy use prediction data are available.

Princeton Energy Park
No energy use prediction data are available.

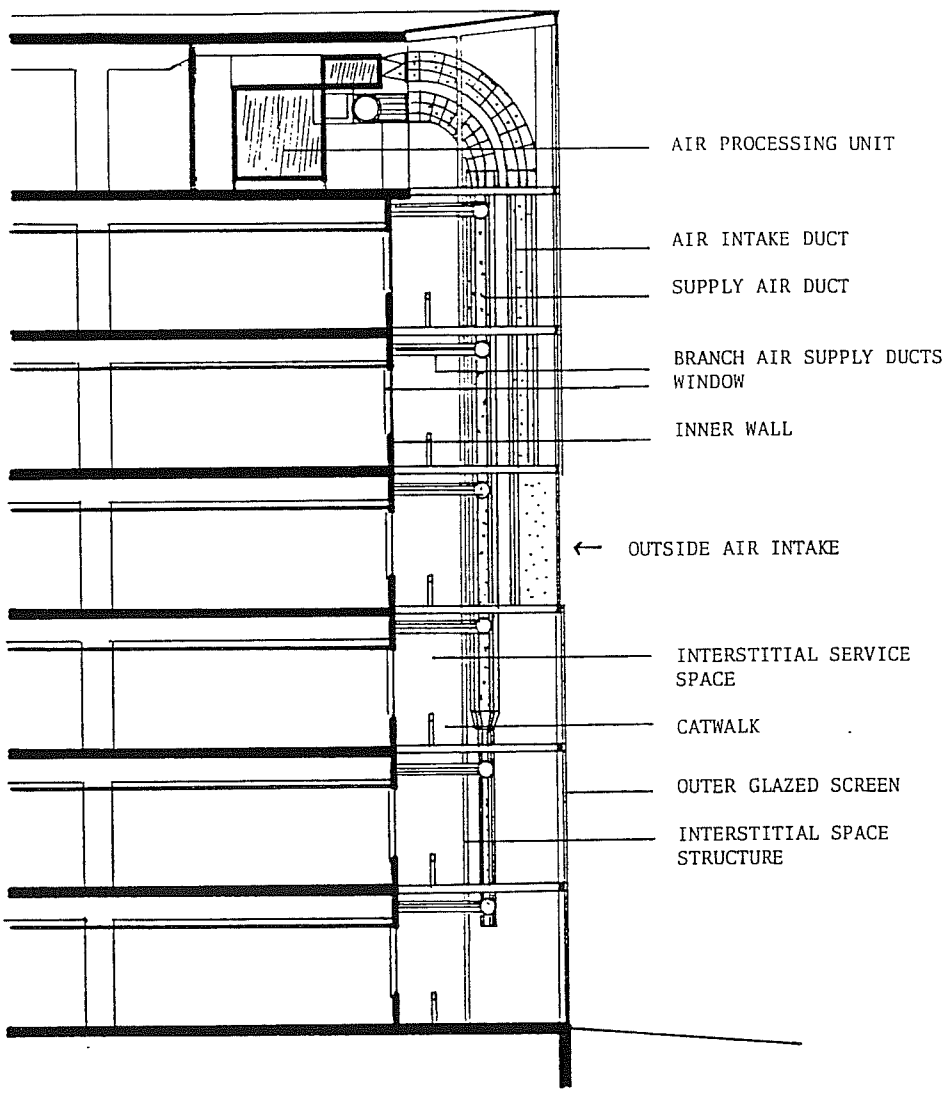

Figure 2. Section of the double envelope system (from Architectural Review June 1991).

AIR OR WATER FLOW GRIDS

DESCRIPTION
Conditioned air or water is circulated through the structural gridwork of the windows to provide heating and cooling through radiation at the window plane. The success of this system is largely dependent on the proportion of the total surface of the gridwork with respect to the area of the glass. This technology is also called a window profile heating system.
The system is very similar in principle to a radiator. Circulation is controlled by means of a thermostatic valve or other control gear. Thermal breaks and insulation of the exterior mullion surface will minimize heat loss to the outside environment. A rust inhibitor such as potassium nitrate and an anti-freeze such as potassium carbonate may be dissolved in the water to prevent corrosion and ice accumulation within the gridwork.

SOURCES AND STATUS OF AVAILABILITY
Unknown. Most case studies are presented in Germany.

PROS AND CONS
The duplication of materials necessary for an airflow window and a double envelope system is eliminated. The system requires no special ducting nor does it present any problems for integration with other envelope systems, e.g. light shelves.
The use of water through the channels of the window structure may appear to some as an inherently troublesome solution for the building shell. Immediately, concerns over structural integrity, corrosion, and leakage come to mind. Serviceability and continued maintenance would appear to be mandatory. Noise created by possible jackhammering of the circulating water may be of some concern.

COMFORT PERFORMANCE
See airflow windows.

IMPACT ON BUILDING DESIGN
There is no impact on the appearance of the building.

COST AND LIFE CYCLE ECONOMICS
Unknown. The window structure itself will require careful specification and design if water is used as the heat transfer medium. In principle, a secondary pipe will need to be placed within the window structure. Window manufacturers and architects may not be willing to bear the additional liability until the technology has been demonstrated and tested in the field.

MARKET SHARE AND EXPECTED TRENDS
This system has been developed in West Germany and has not been implemented in the U. S. at this time.

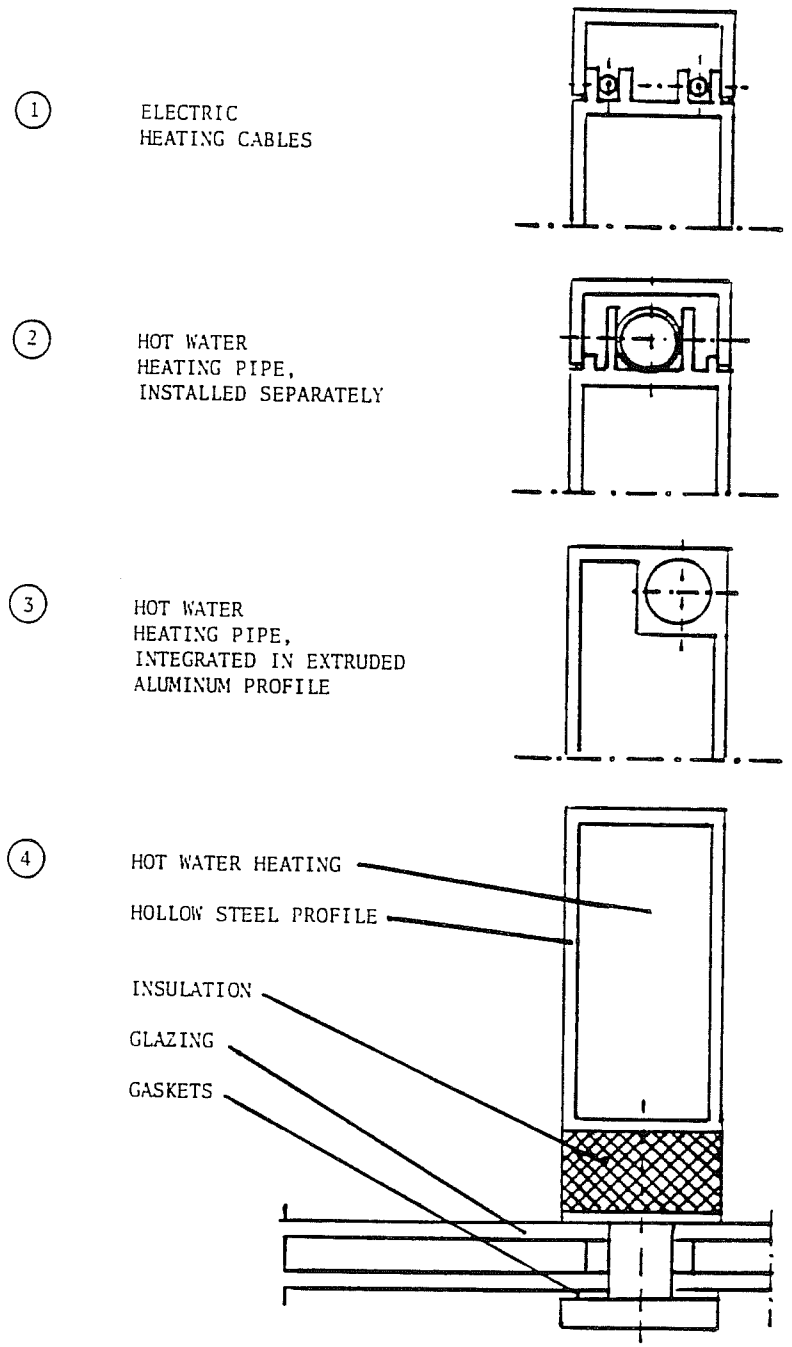

Figure 3. Sections, four variations of window profile heating structures (from Muller).

ACKNOWLEDGEMENTS

This research was funded by the California Institute for Energy Efficiency (CIEE), a research unit of the University of California. Publication of research results does not imply CIEE endorsement of or agreement with these findings, nor that of any CIEE sponsor. Additional related support was provided by the Assistant Secretary for Conservation and Renewable Energy, Office of Building Technologies, Building Systems and Materials Division of the U.S. Department of Energy under Contract No. DE-AC03-76SF00098.

REFERENCES

Aitken, D.W. 1984. "Components for window and perimeter-lighting redesign to promote the active use and control of thermal and daylight energies in existing commercial buildings," General Proceedings, Building Redesign and Energy Challenge, Boston, Massachusetts, November 15-17, 1984, J.H. Cable ed., American Institute of Architects.

Bushby, S.T. and Newman, H.M. 1991. "The BACnet communication protocol for building automation systems," ASHRAE Journal, April.

Fanger, P.O. 1972. "Thermal Comfort," McGraw-Hill Book Company.

Kreider, J.F. 1991. "Artificial neural networks demonstration for automated generation of energy use predictors for commercial buildings," ASHRAE Transactions, Vol. 97, Part 2, IN-91-9-3.

Kroner, W.M. ed. 1988. "A New Frontier: Environments for Innovation," Proceedings of the International Symposium on Advanced Comfort Systems for the Work-Environment, May 1-3, 1988.

Muller, H.F.O. "Advanced window systems related to thermal comfort and control of work environment," in "A New Frontier: Environments for Innovation."

Gartner, F. "Curtain wall including heating and cooling functions" in "A New Frontier: Environments for Innovation."

Mueller, H.F.O 1984. "Exhaust-air ventilated windows in office buildings," ASHRAE Transactions, AT-84-18 No. 3.

Ripatti, H. 1984. "Airflow window system - Making fenestration the solution rather than the problem in energy use," ASHRAE Transactions, AT-84-18, No. 2.

Stubbs, M.S. and Gordon, D.E. 1989. "The performance of some 1970s energy savers," Architecture, March (Occidental Chemical Center).

Miscellaneous articles and case studies from June 1991 issue of The Architectural Review (Issue theme: "Climate and Architecture")