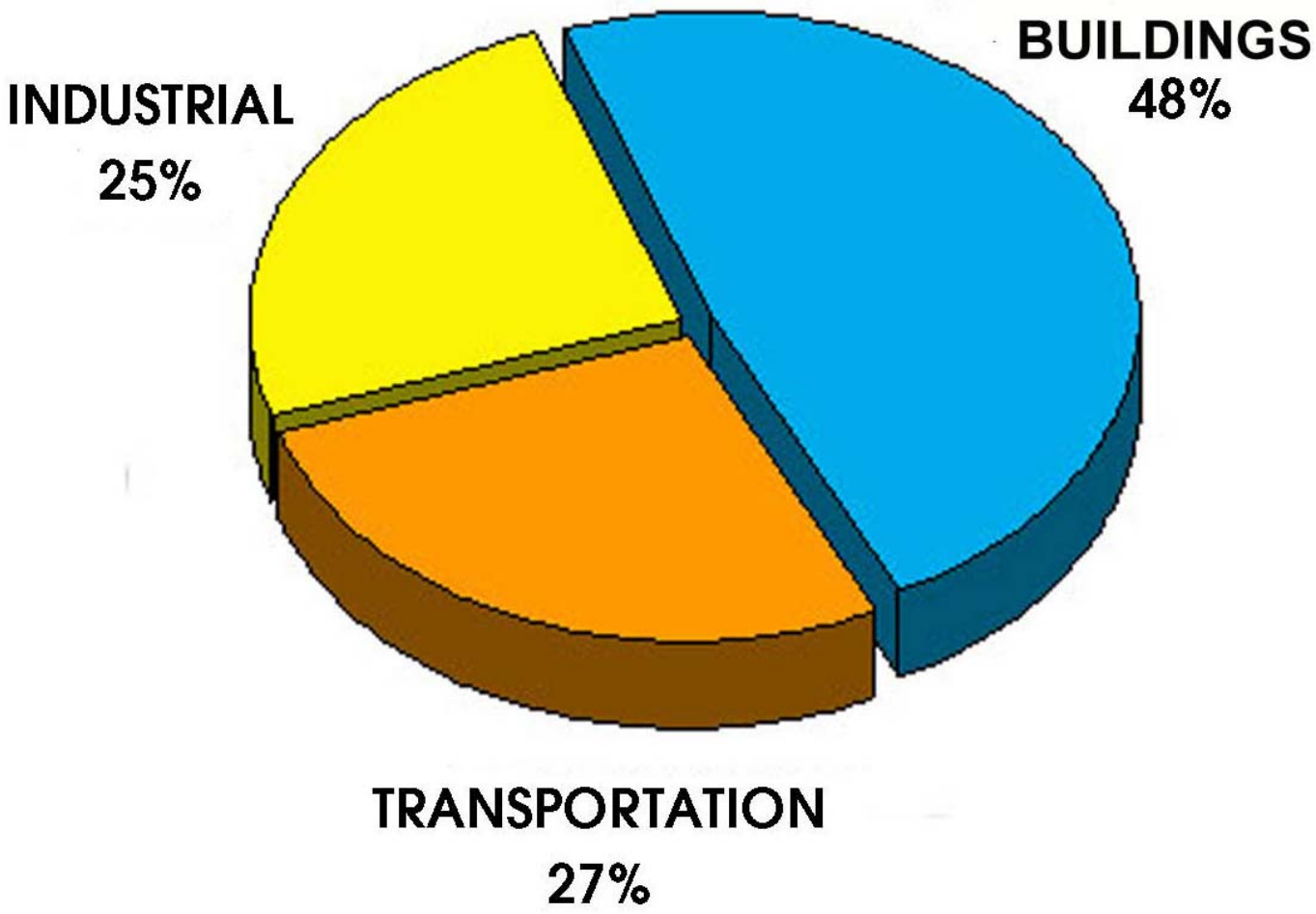

U.S. ENERGY CONSUMPTION

Source: Energy Information Administration Statistics (Architecture 2030)

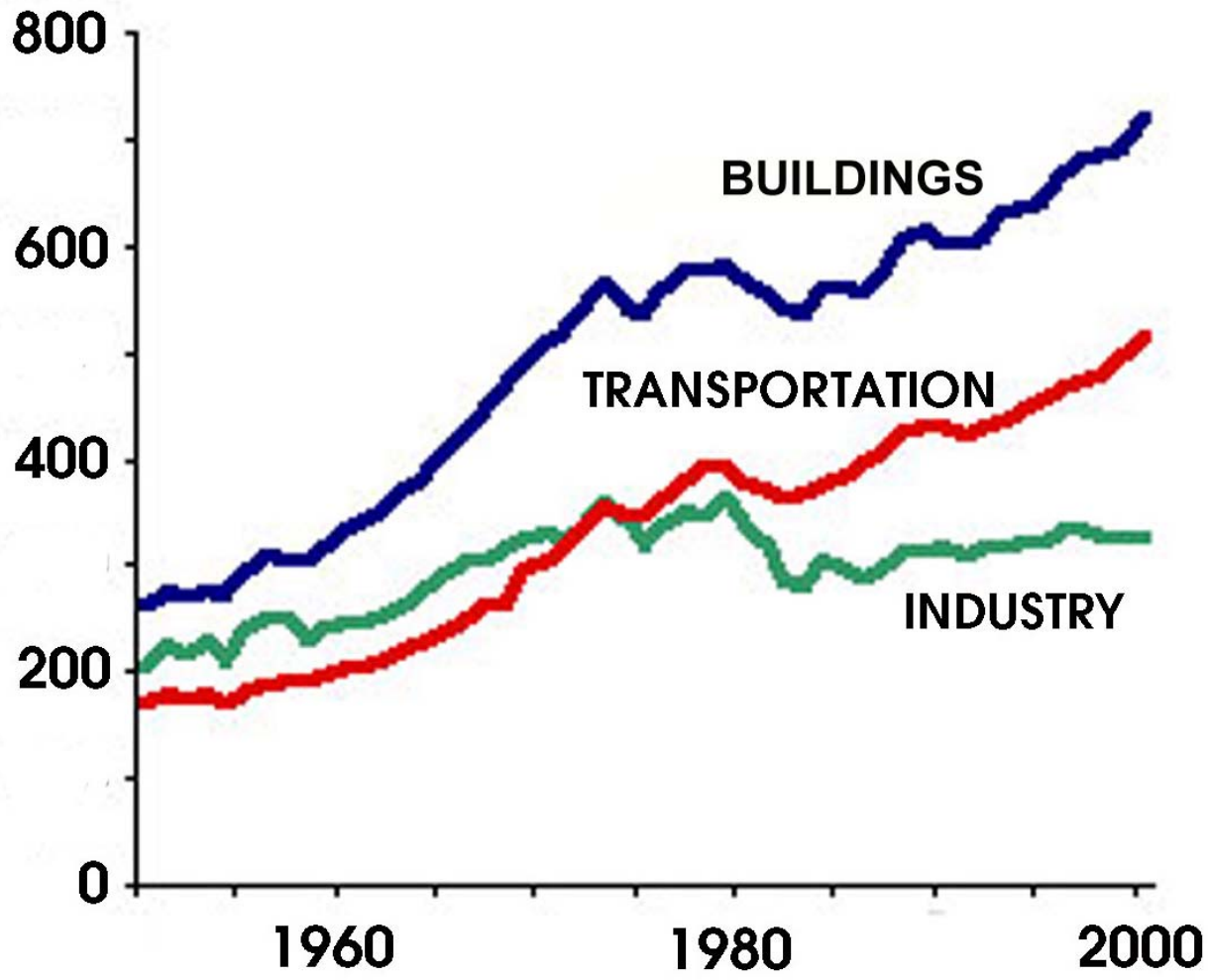

CO2 EMISSIONS by SECTOR

(Million Metric Tons of Carbon)

Source: Energy Information Administration Statistics (Architecture 2030)

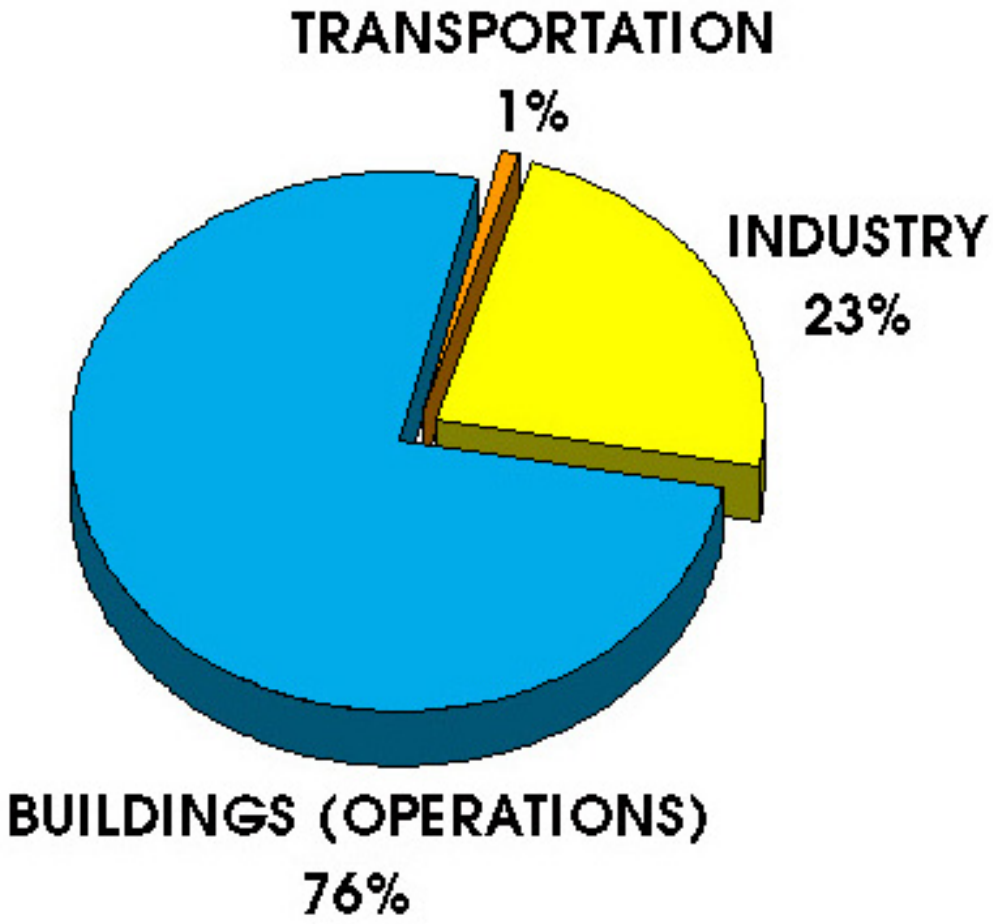

U.S. ELECTRICITY CONSUMPTION

Source: Energy Information Administration Statistics (Architecture 2030)

National Lighting Energy Consumption

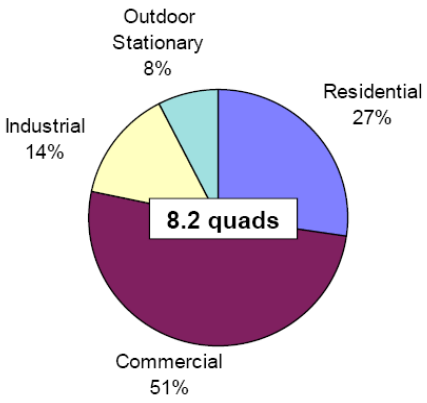

390 Billion kWh used for lighting in all commercial buildings in 2001

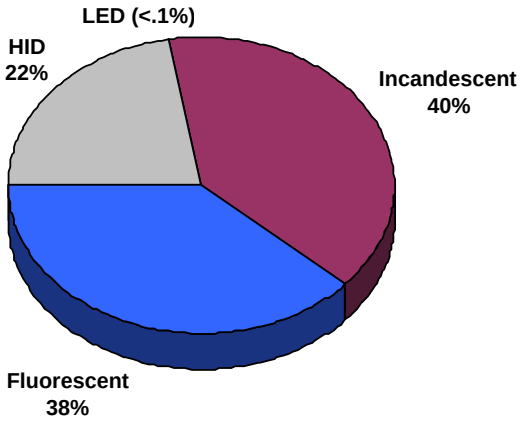

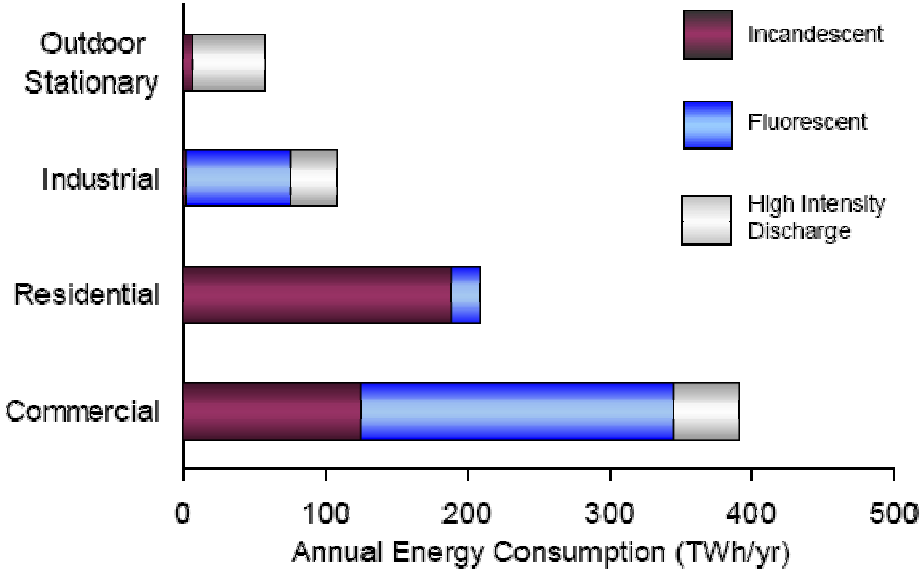

Lighting Energy Consumption by Major Sector and Light Source Type

Breakdown of Lighting Energy

Source: Navigant Consulting, Inc., U.S. Lighting Market Characterization, Volume I: National Lighting Inventory and, Energy Consumption Estimate, Final Report for US DOE, 2002

Impact of Electronic Ballasts and T-8 Fluorescent Lamps on Lighting Consumption

Annual Shipment of Ballasts in US (1988 – 2003)

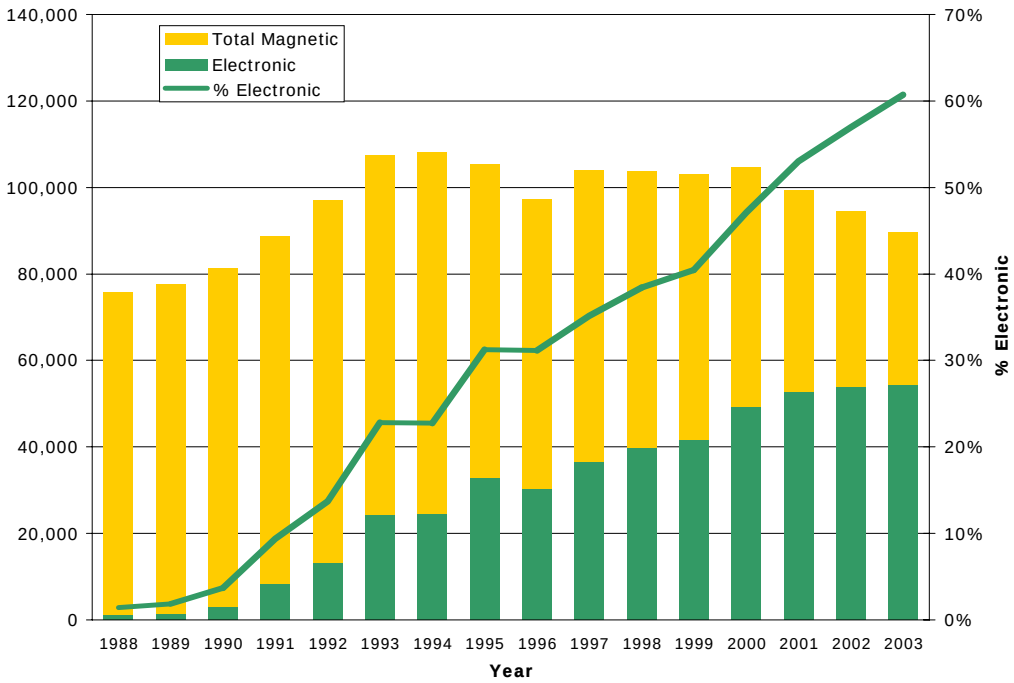

Fluorescent Lighting in Commercial Buildings (2001)

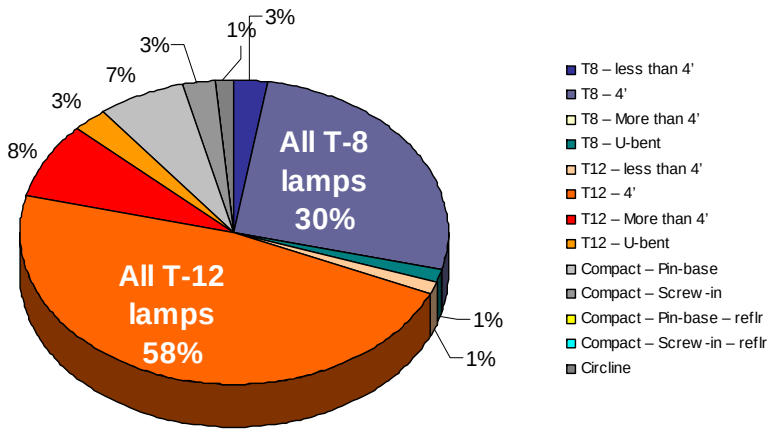

After 20 years, 50% of US lighting still uses inefficient magnetic ballasts

Source: Navigant Consulting, Inc., U.S. Lighting Market Characterization, Volume I: National Lighting Inventory and, Energy Consumption Estimate, Final Report for US DOE, 2002

US Bureau of the Census

Lighting wastes energy because dimming lighting controls are not widely used

Major Lighting Control Strategies

- Vacancy Detection or Scheduling
- Automatic Dimming with Daylight
- Tuning Strategies
  - Personal dimming controls
  - Institutional requirements
- Lumen Maintenance
- Demand Response

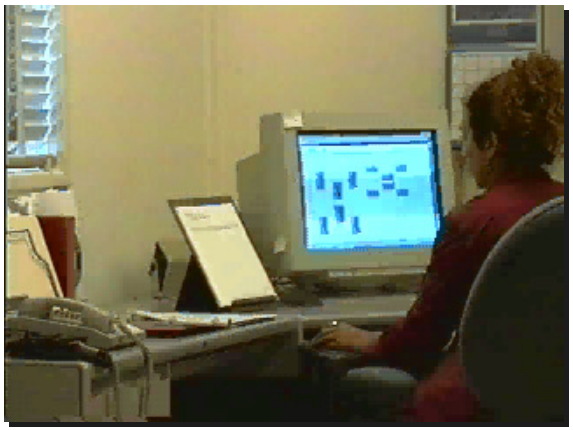

Key Barriers to Advanced Lighting Controls

- Not cost-effective to add control wiring to existing buildings
- Delivering robust lighting control systems is challenge to industry
- *Commissioning* not properly understood
- Dimming inherently more complicated than non-dimming
- Quantifying the energy cost savings from lighting controls is inexact

Energy Policy Act of 2005 (EPAct 2005)

- Bi-level lighting required as prescriptive minimum
- 50% of ASHRAE 99

Implications of EPAct 2005

- Technical basis for a Grand Challenge for advanced lighting controls
  - Retrofitting dimming ballasts

A Challenge to the Industry

ALL lighting should be:

- Dimmable
- Addressable
- Affordable

NOW is the time for a concerted program to deploy energy-saving lighting controls Nationwide

Energy Implications and Economic Impact of Converting to Wireless Lighting Controls

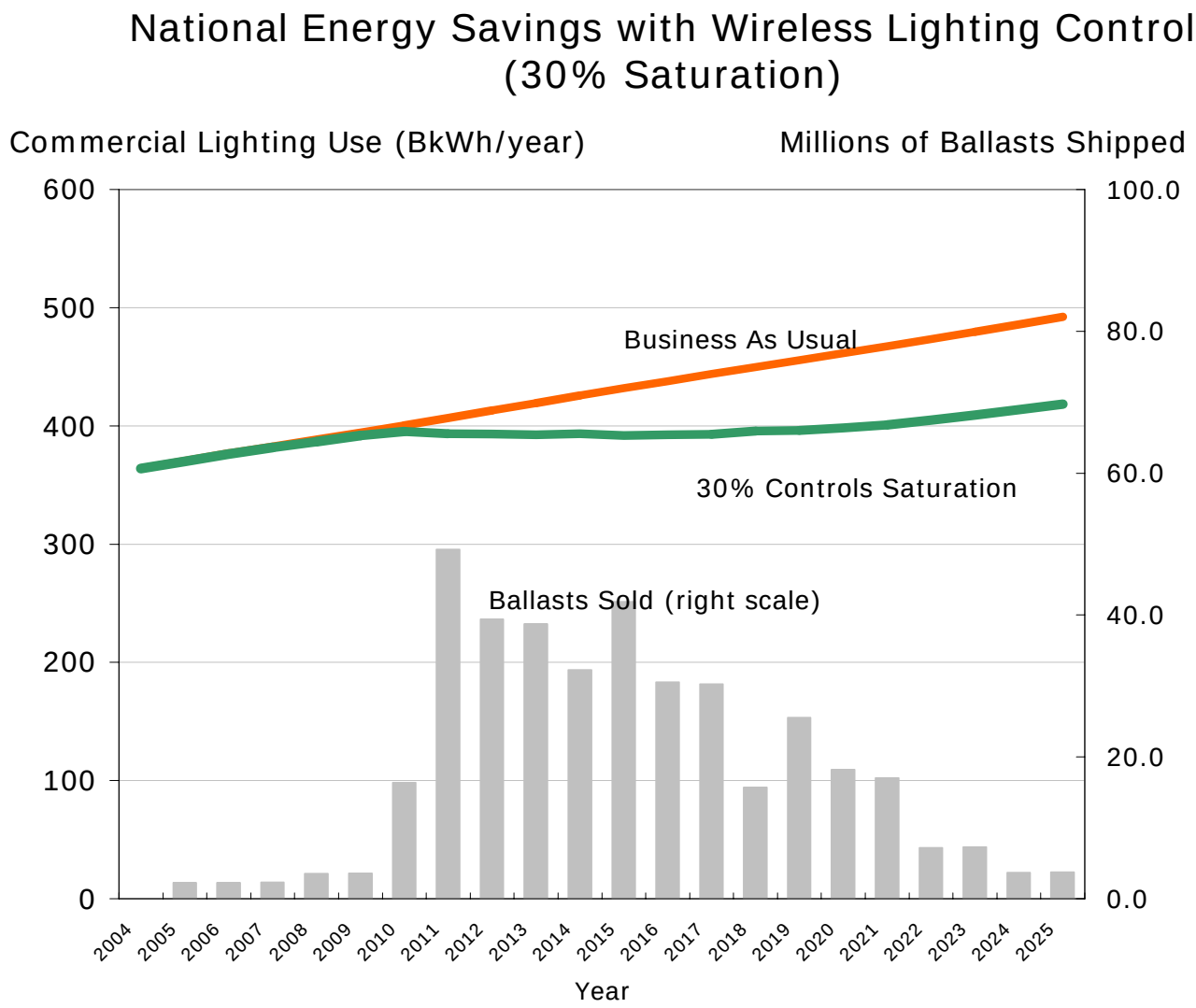

Cumulative Benefits: Installing Wireless Lighting Controls in 30% of Commercial Buildings by 2025

Energy	**695 Billion kWh Energy Saved** **$52 Billion in Energy Cost Savings**
Environmental	**139 MMTCe Carbon Avoided** **Equivalent 93 Million Cars Removed**
Economic & Industrial	**400 Million Dimming Ballasts Sold** **$10 Billion Market Value**

Getting Dimmable Lighting Controls to the Building Market

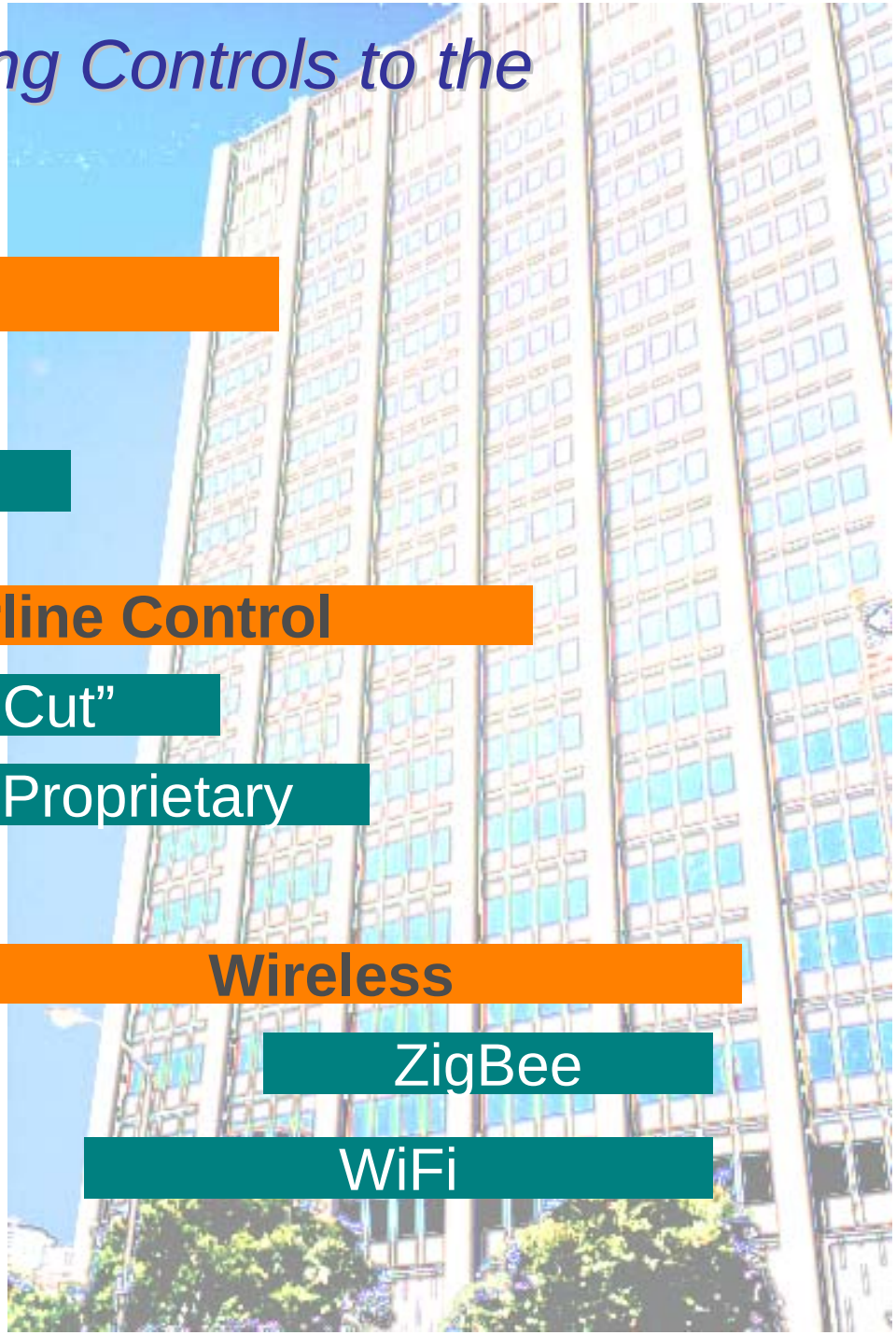

Wired Bus

- Analog (0-10 VDC)
- Digital (DALI)

Powerline Control

- "Phase-Cut"
- Other Proprietary

Wireless

- ZigBee
- WiFi

Lighting ballast industry has selected DALI as its standardized wired digital protocol

No generally accepted powerline carrier scheme

ZigBee is leading contender for future wireless lighting and building control products

Option 1: Analog Control (0-10 VDC bus)

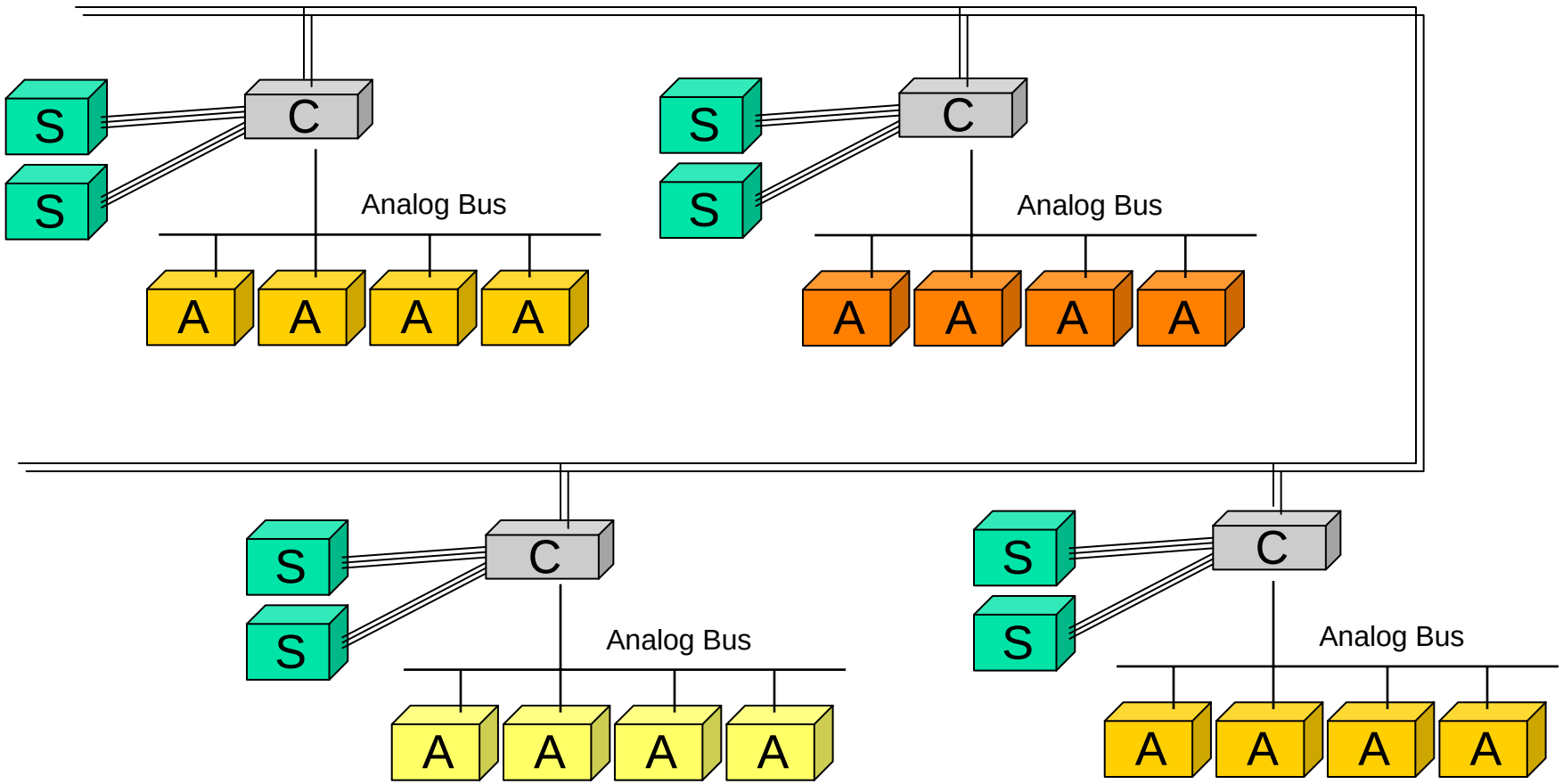

Option 2: Digital Control (Basic DALI)

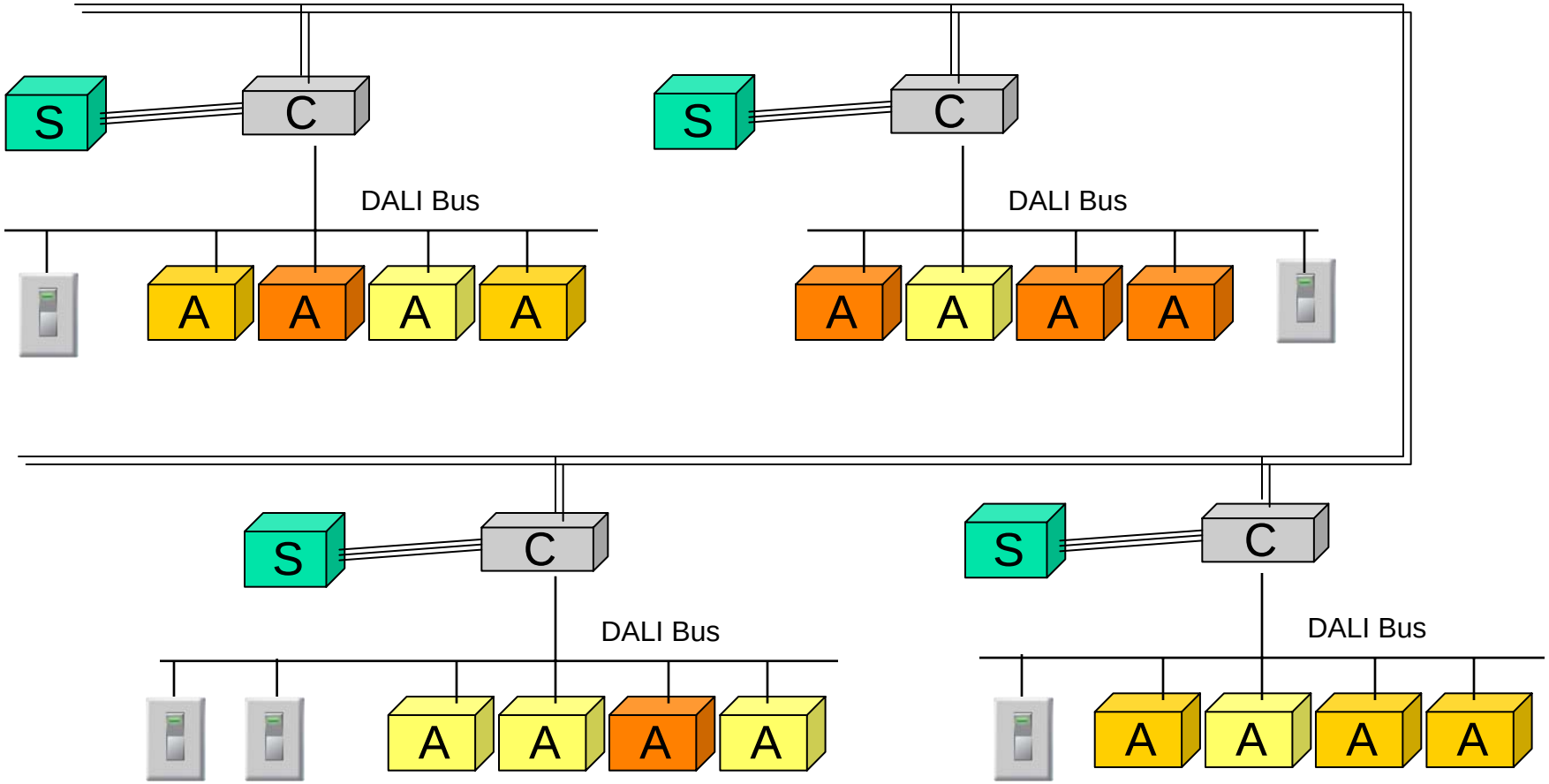

Option 3: Digital Control (Enhanced DALI)

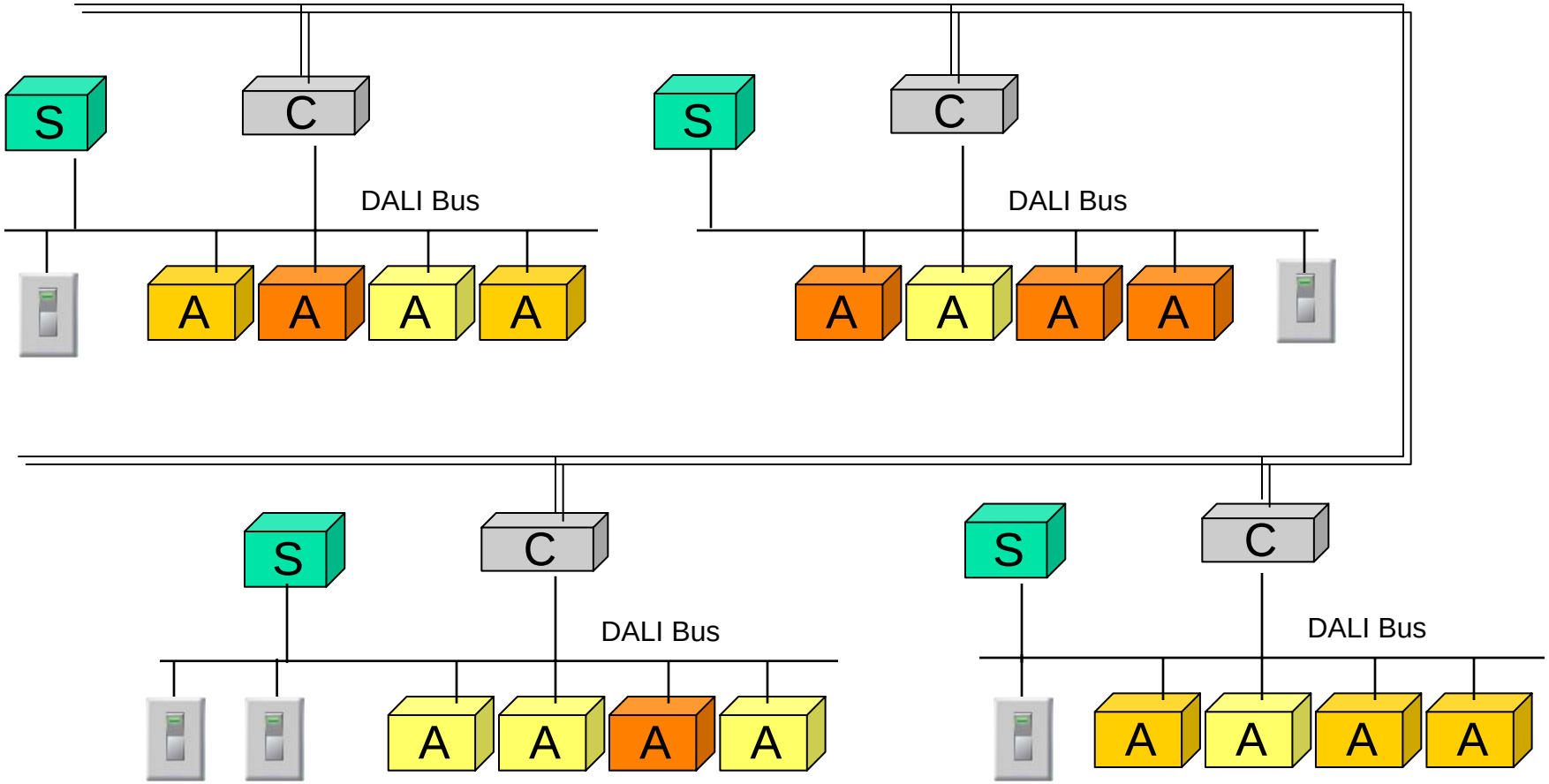

Wireless Opportunities

- Major technology drivers
  - Wireless Internet everywhere
  - Ascendancy of “plug-and-play” design philosophy
- Industry now developing capable lighting controllers for existing buildings
  - Wireless technology will soon solve the wiring problems
- Advanced lighting controls have a compelling value proposition
  - Studies show occupants value personal controls

Option 4: Full Wireless

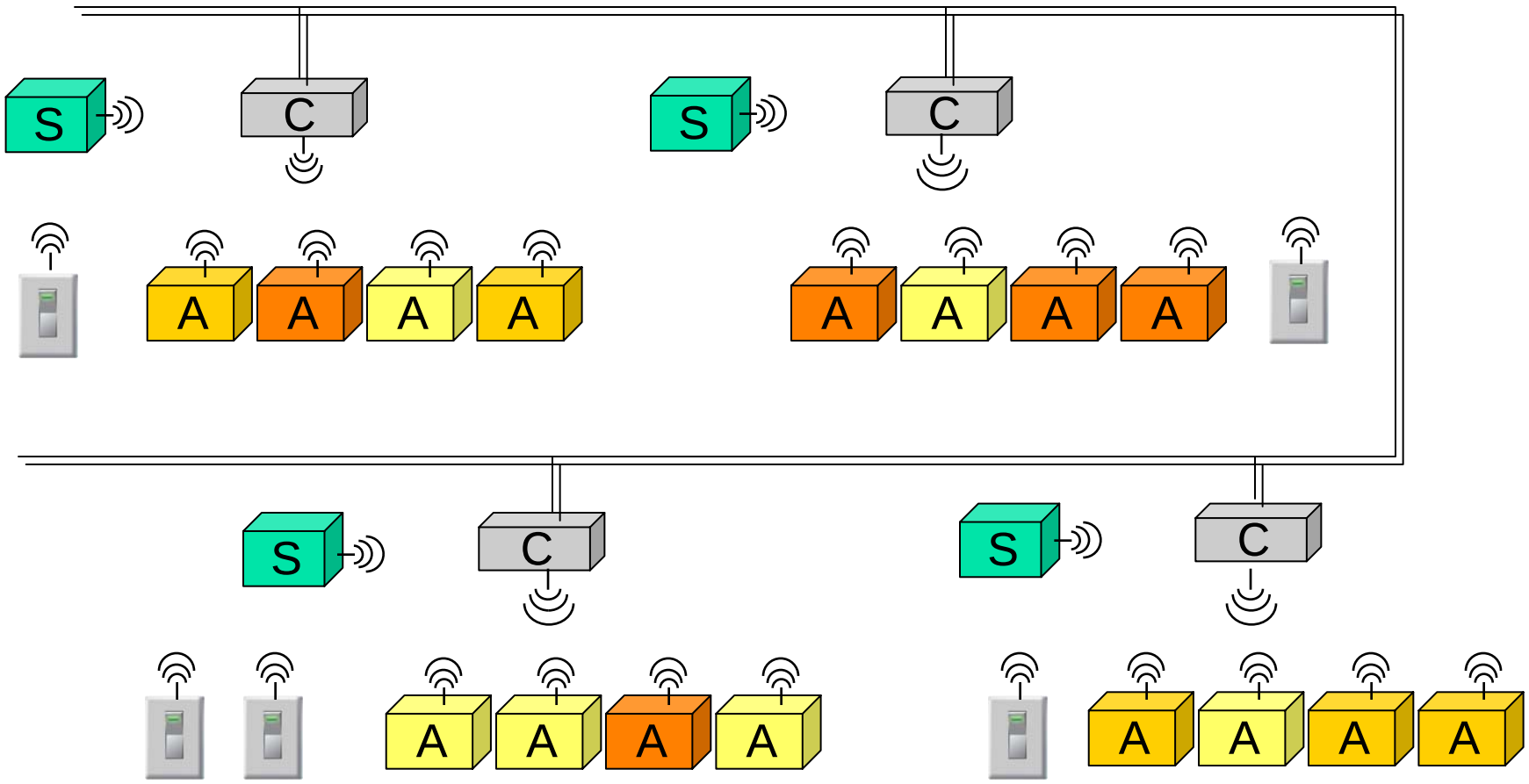

A Hybrid Option: Analog Control (0-10 VDC bus) Accessible with Wireless Transmitters

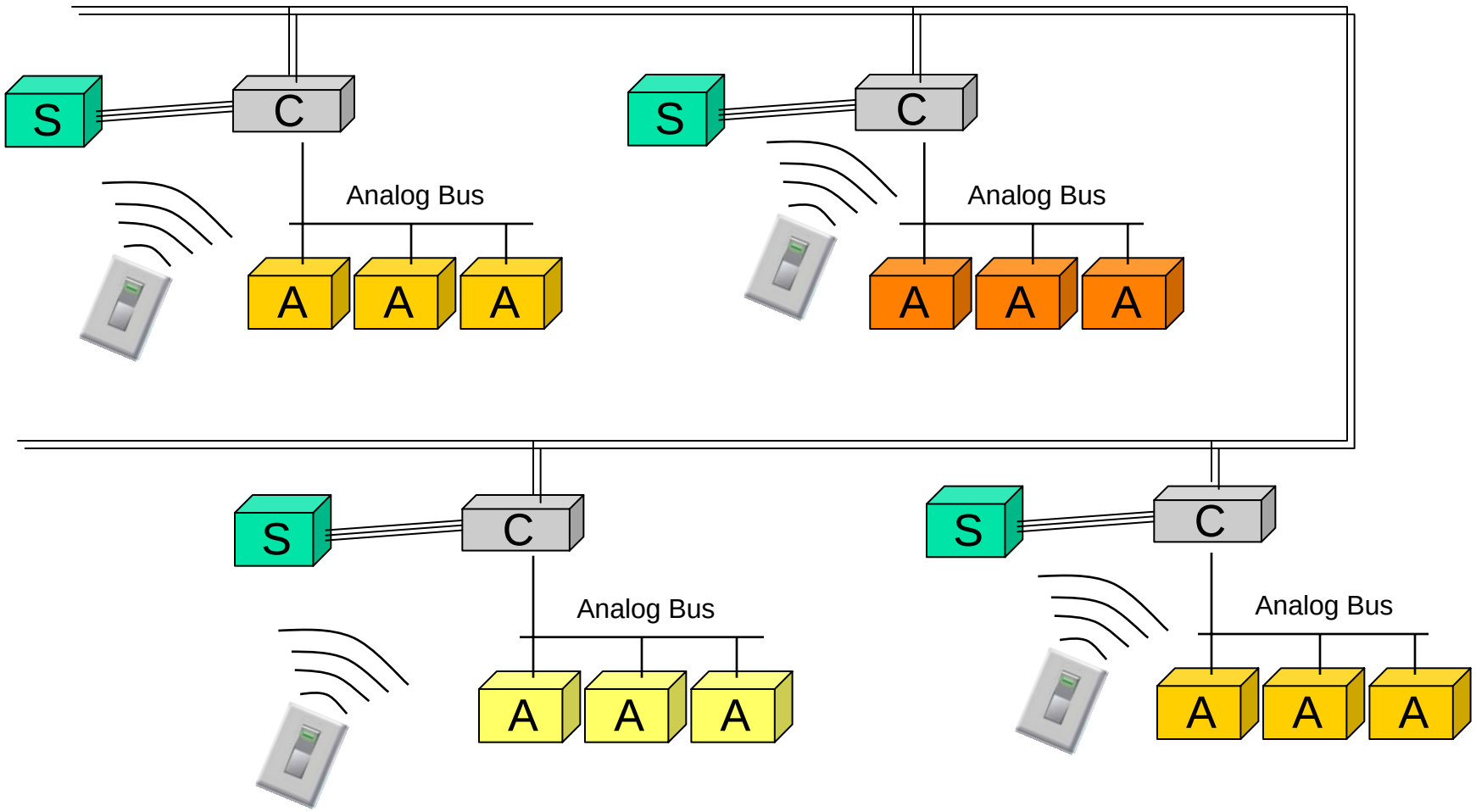

WiLight: A Novel Application of Energy-Scavenging Wireless Communications

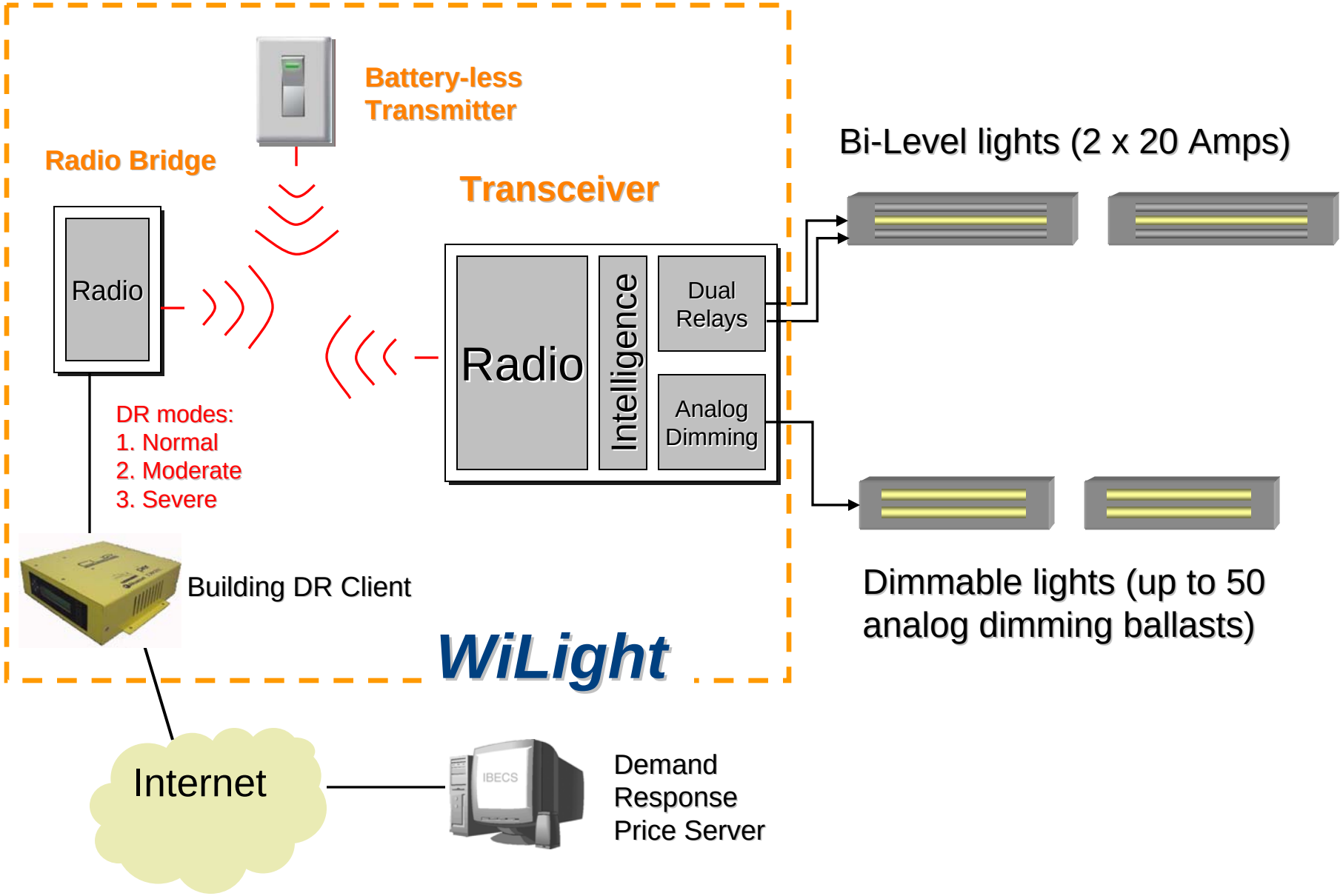

Multiple Wireless Systems Can Co-Exist in Same Physical Space

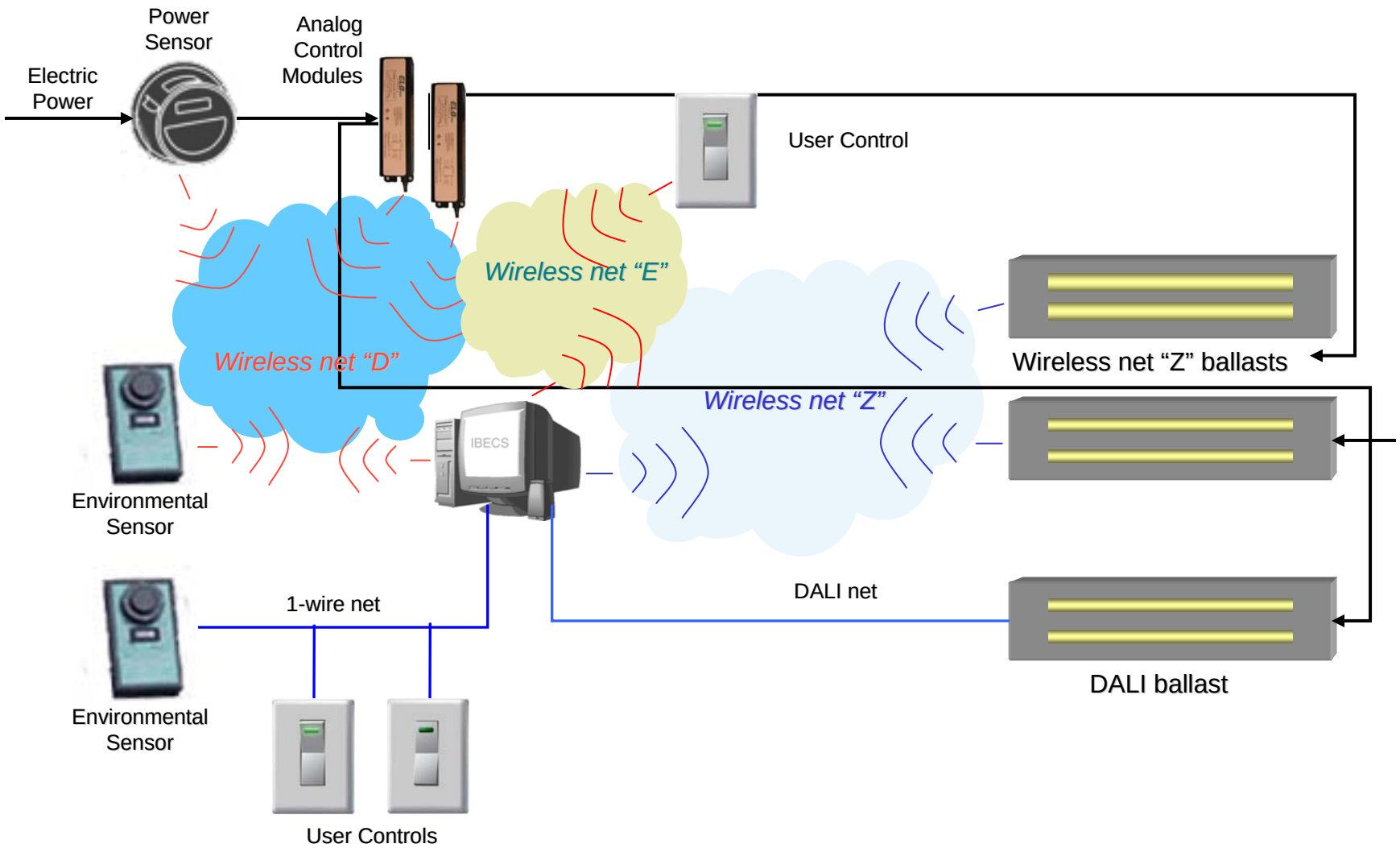

The Evolution of IBECS

IBECS For Total Building Control

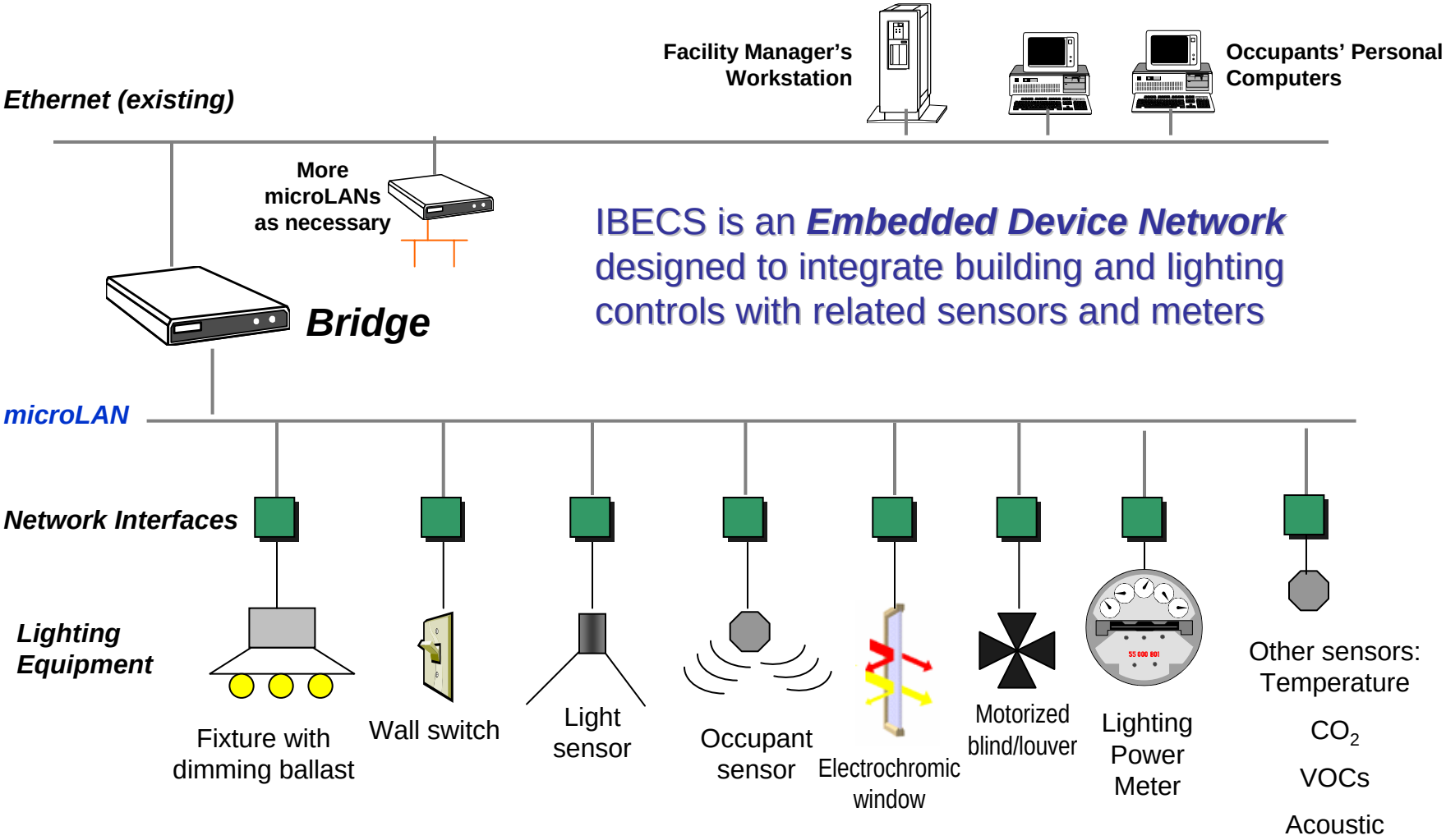

IBECS is an ***Embedded Device Network*** designed to integrate building and lighting controls with related sensors and meters

Evolution of IBECS Control Framework

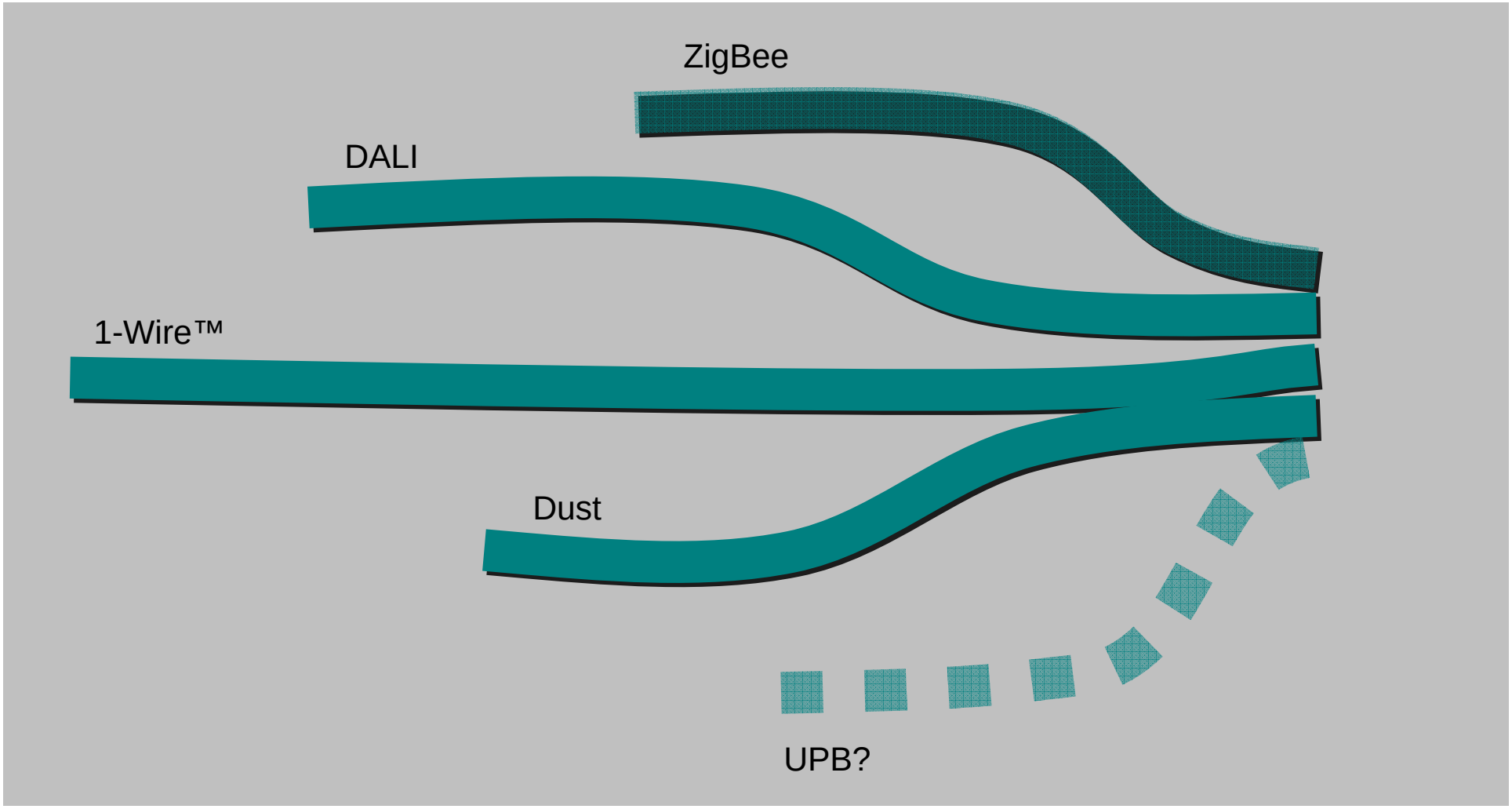

IBECS Control Framework accommodates significant existing and emerging networking technologies

Demonstration of the IBECS Lighting Control Framework

LightFair 2006

This work was supported by Assistant Secretary for Energy Efficiency and Renewable Energy, Office of Building Technology, Building Technologies Program, of the U.S. Department of Energy under Contract No. DE-AC03-76SF00098. The work is also supported by the California Energy Commission's Public Interest Energy Research (PIER) Buildings Program.

IBECS Control Framework

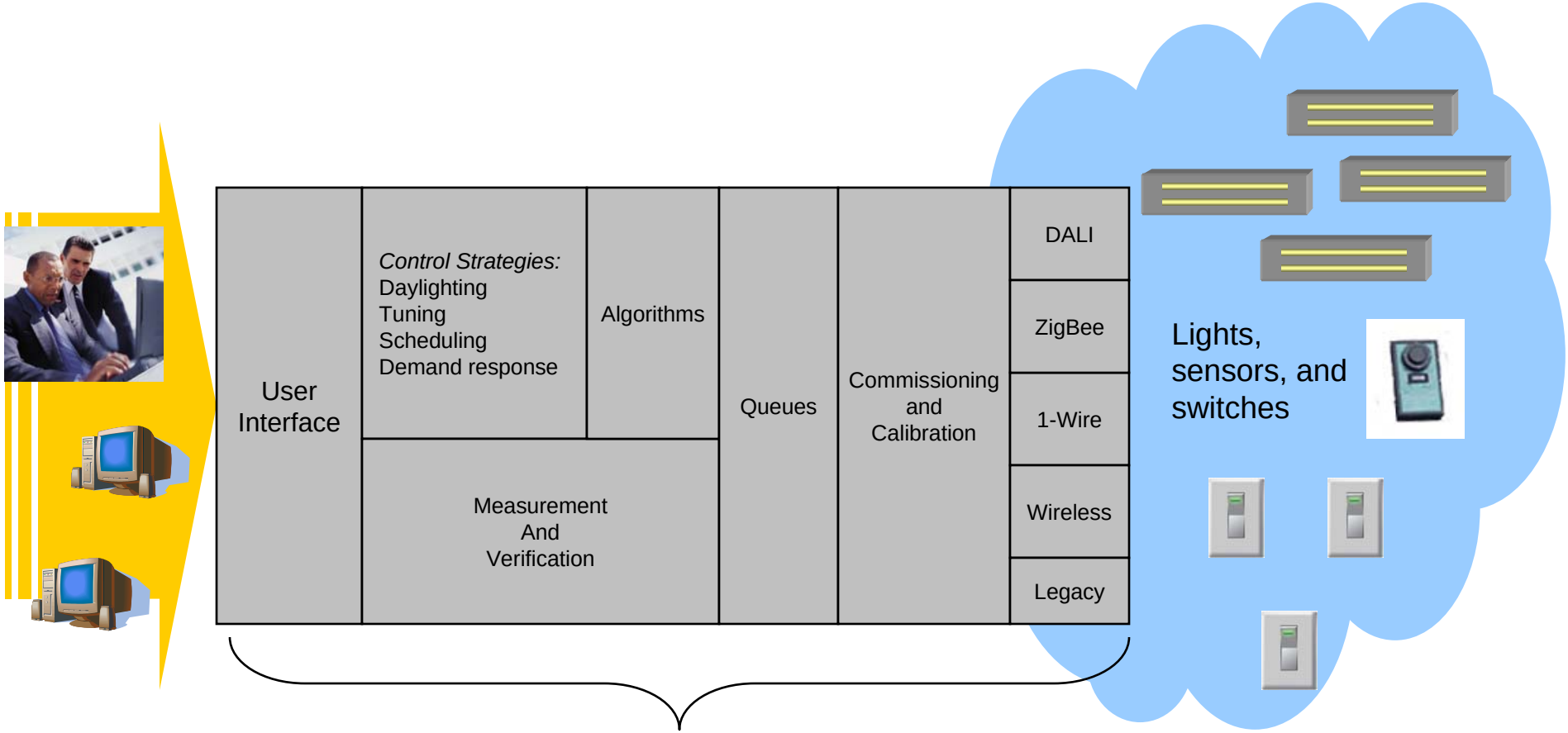

Software running on dedicated PC, intelligent bridge or gateway

System Diagram for IBECS Demonstration

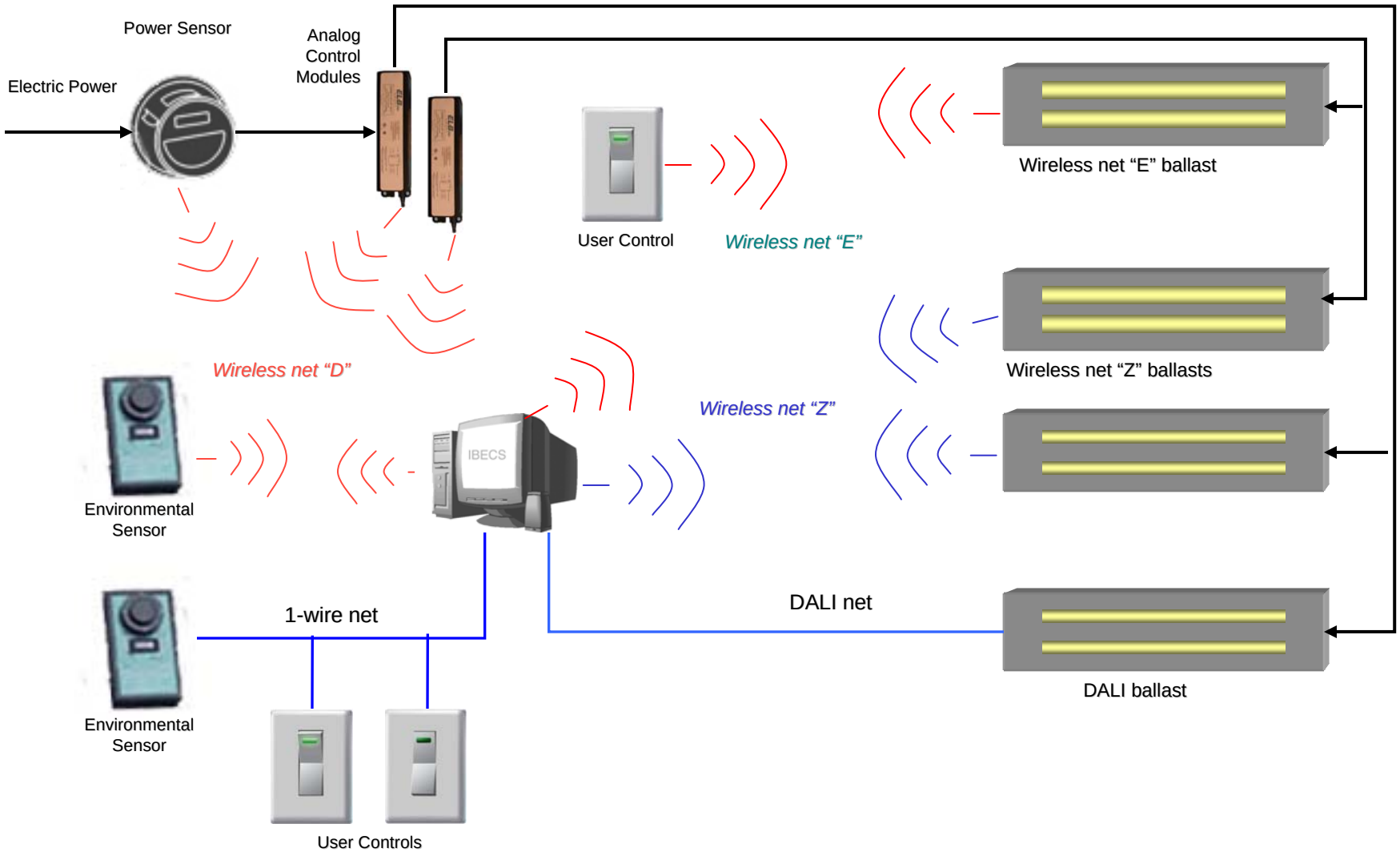

System Diagram for IBECS Demonstration

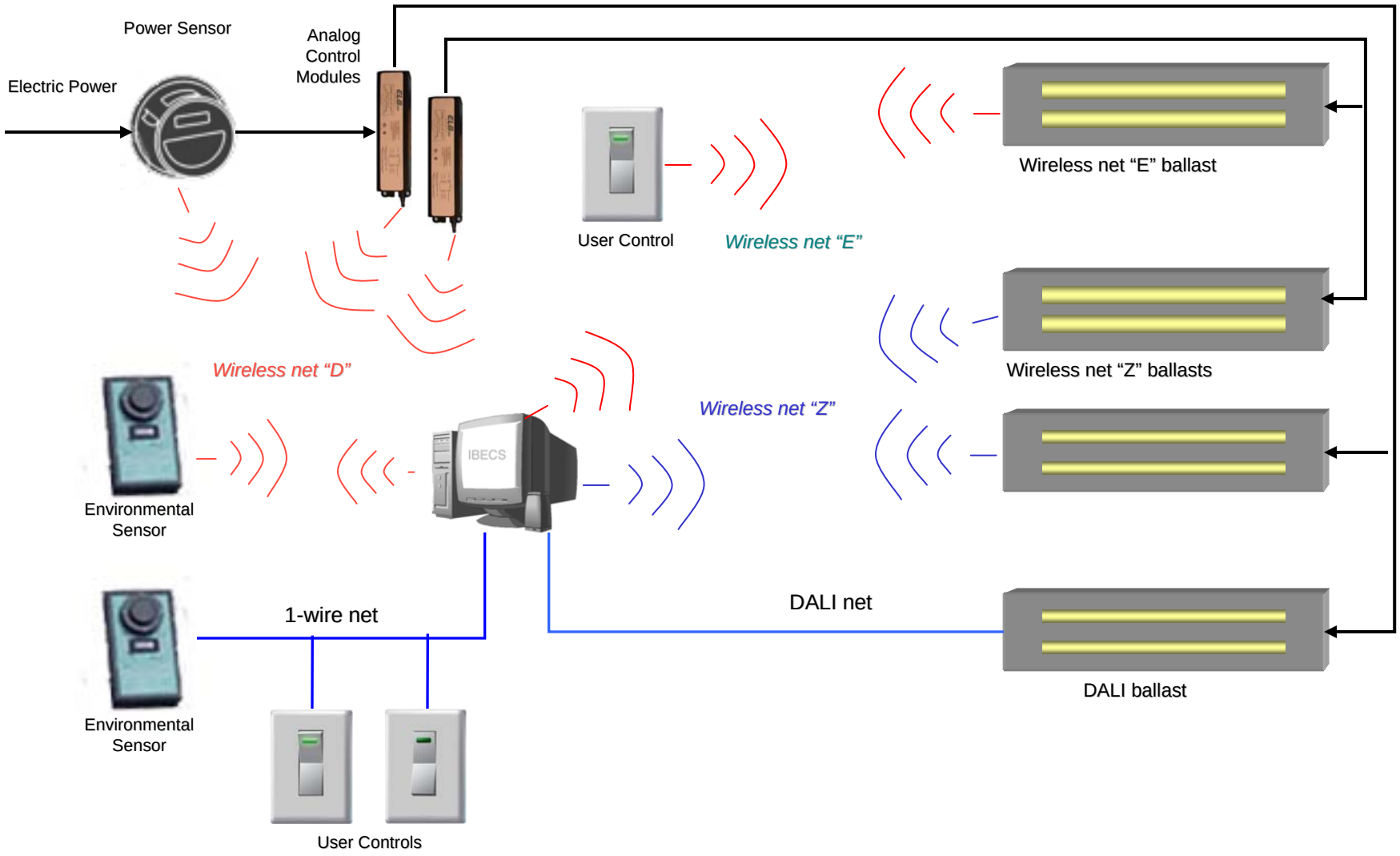

IBECS Control Framework

- Title 24 Switching
- Working With DALI
- Working with Wireless Networks

Title 24 Switching

Configuring IBECS to Implement Title 24 Switching of “Bi-Level” Lighting

Configuring IBECS to Implement “Bi-Level” Switching of Two Lighting Switchlegs

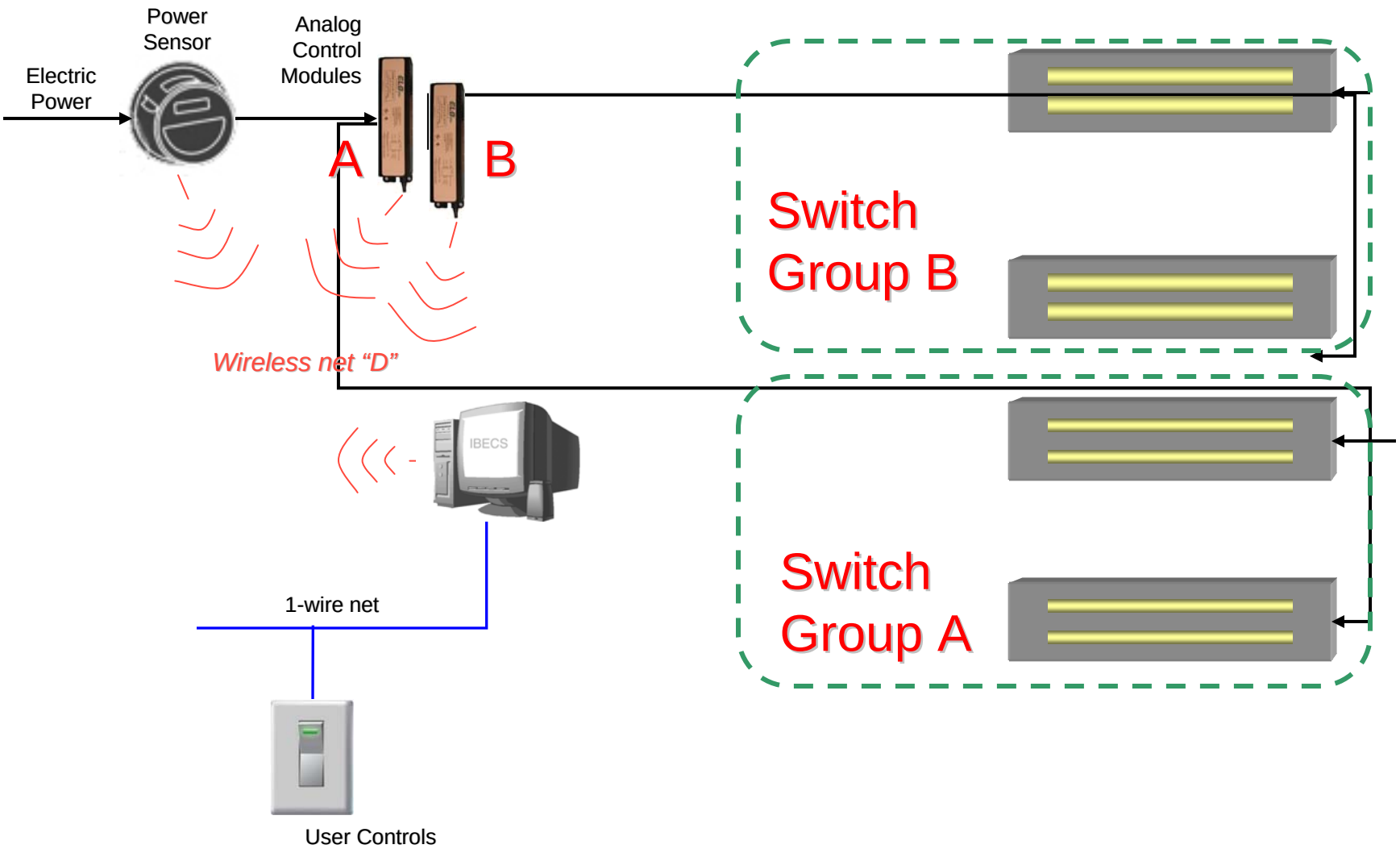

Analog Control Module B Switches Group B

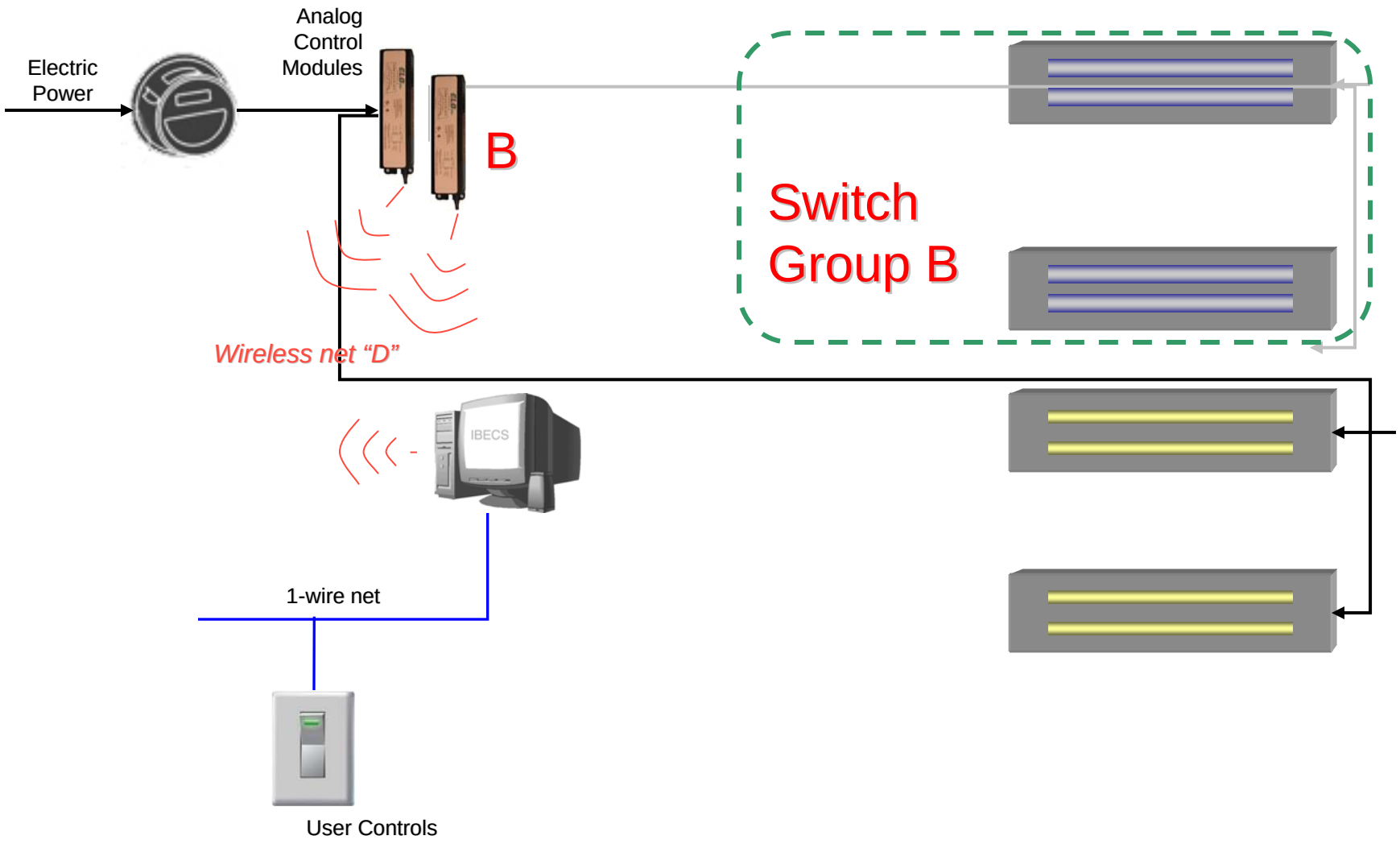

Analog Control Module A Switches Group A

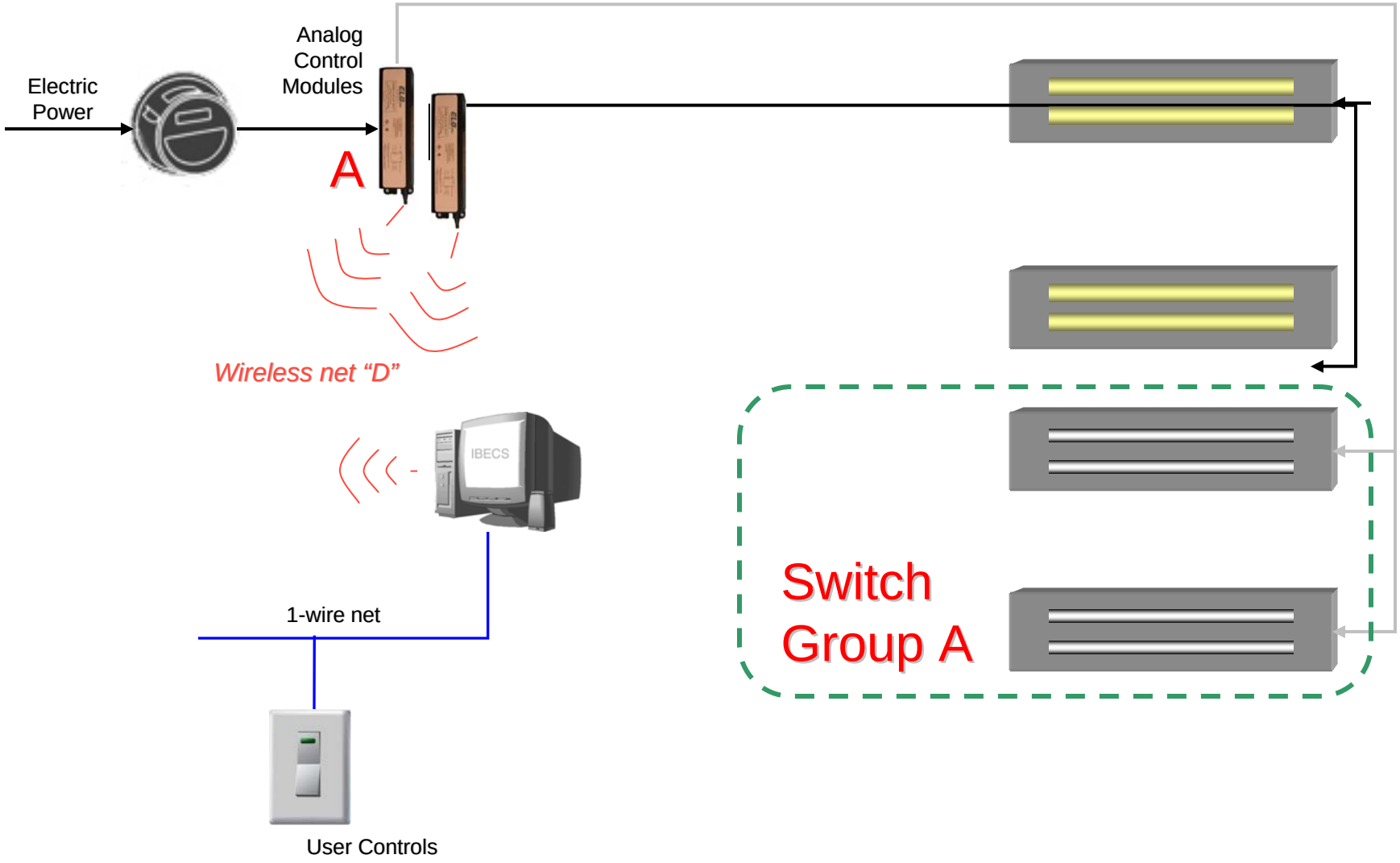

Alternative Configuration for Implementing “Bi-Level” Switching of Two Lighting Switchlegs

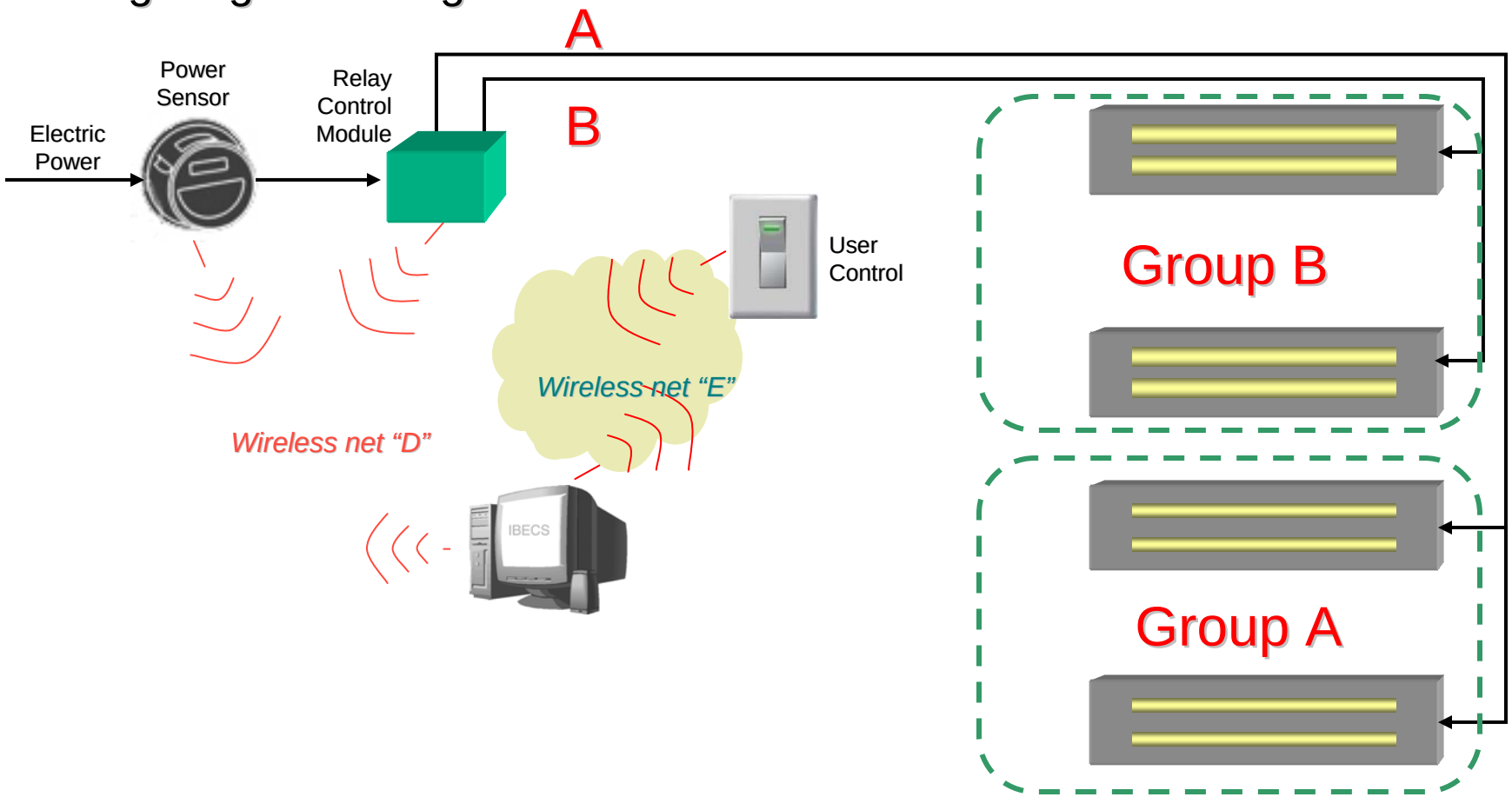

Working with DALI

Configuring IBECS to Control DALI Lighting From Wired and Wireless Networks

Controlling DALI from 1-Wire Sensor Net

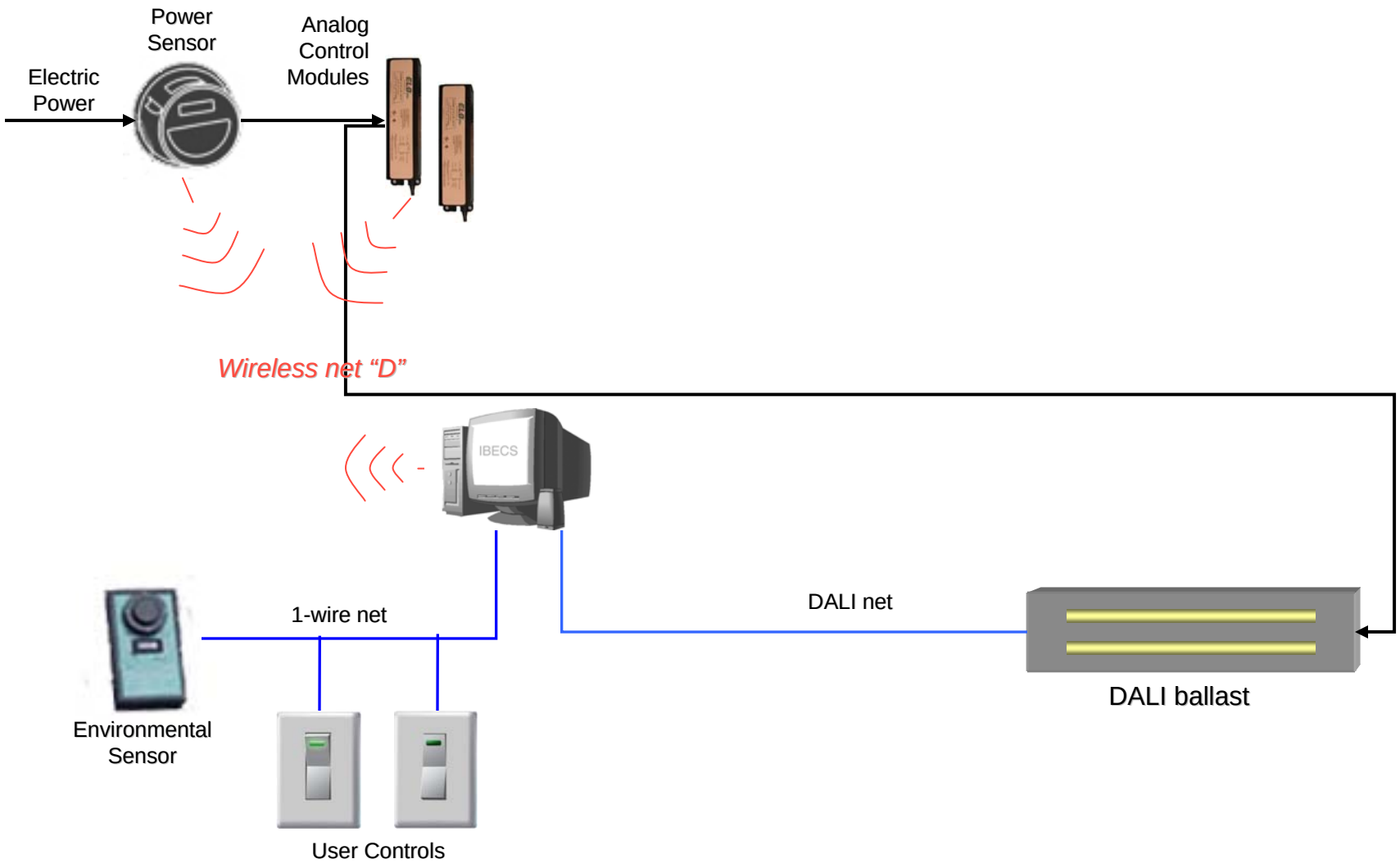

Controlling DALI from Wireless Networks

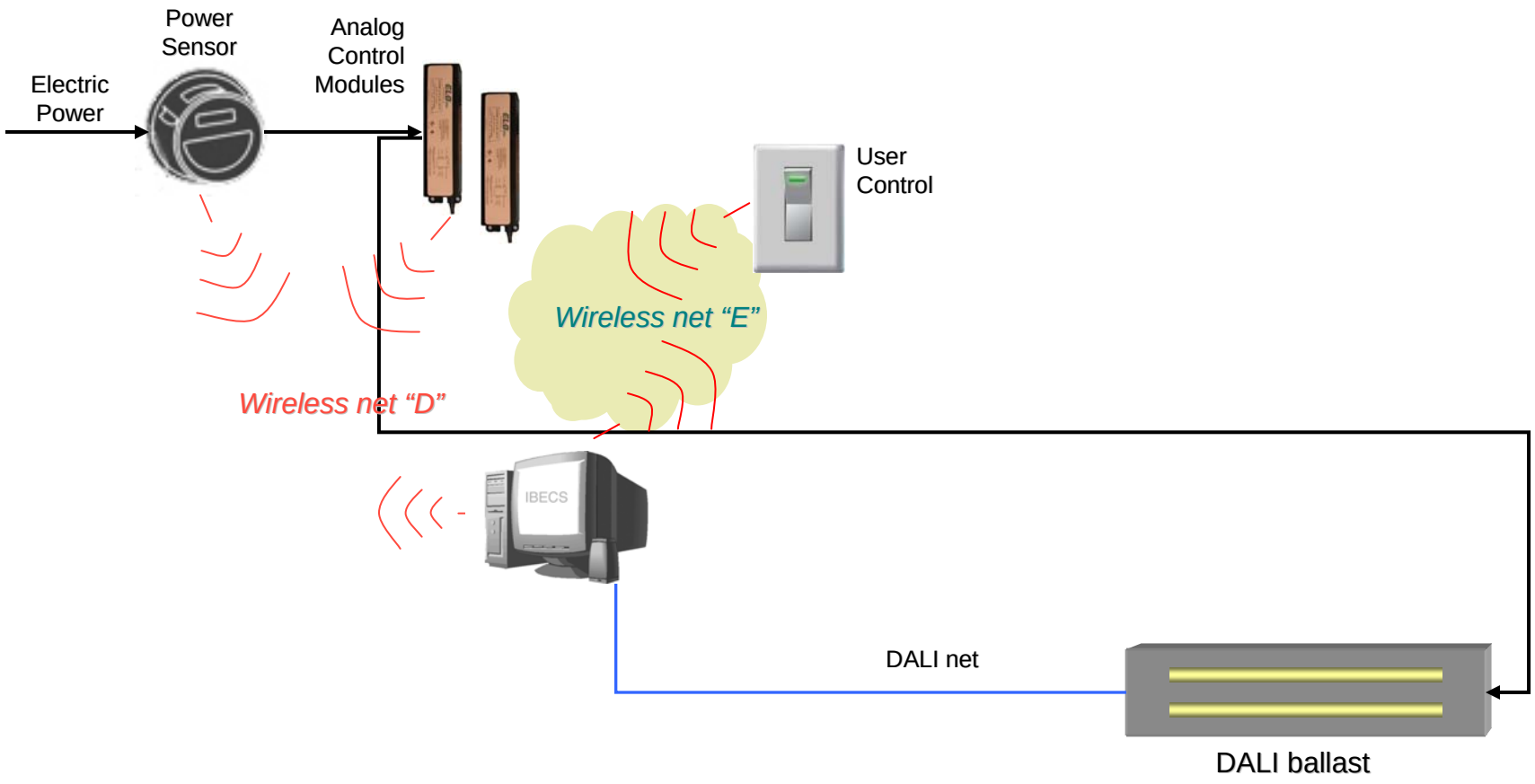

Working with Wireless Sensor Networks

Configuring IBECS to Control Wireless Networks

Controlling Wireless Network from 1-Wire

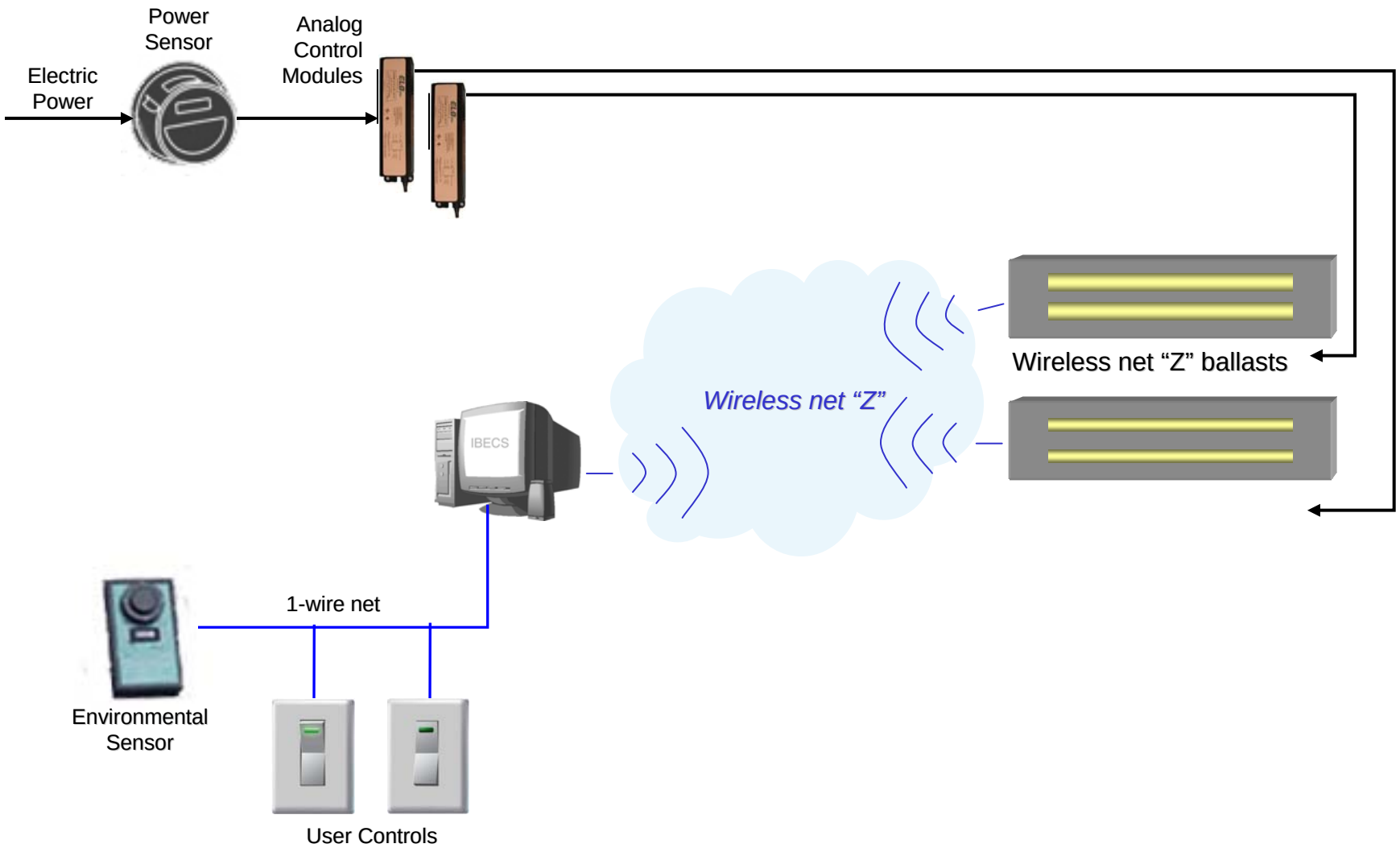

Controlling One Wireless Network from a Second Network

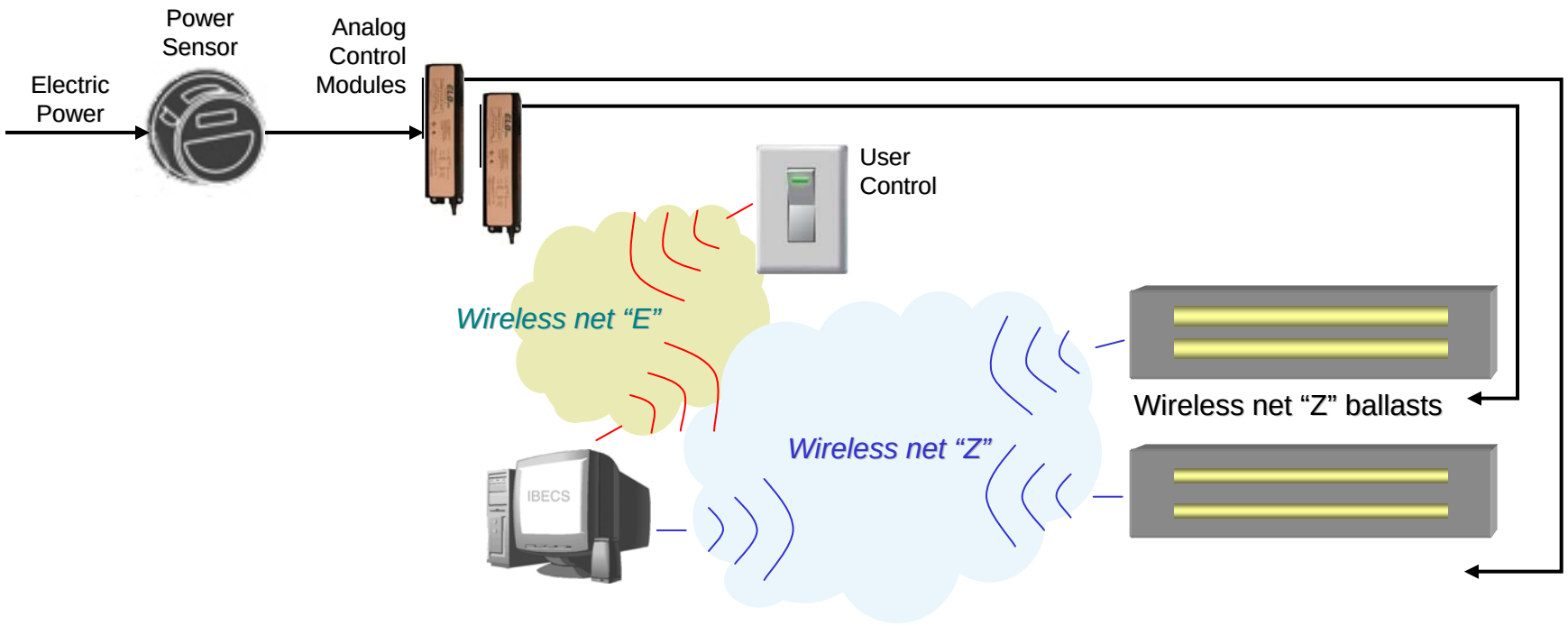

IBECS Communicating Across Three Wireless Networks

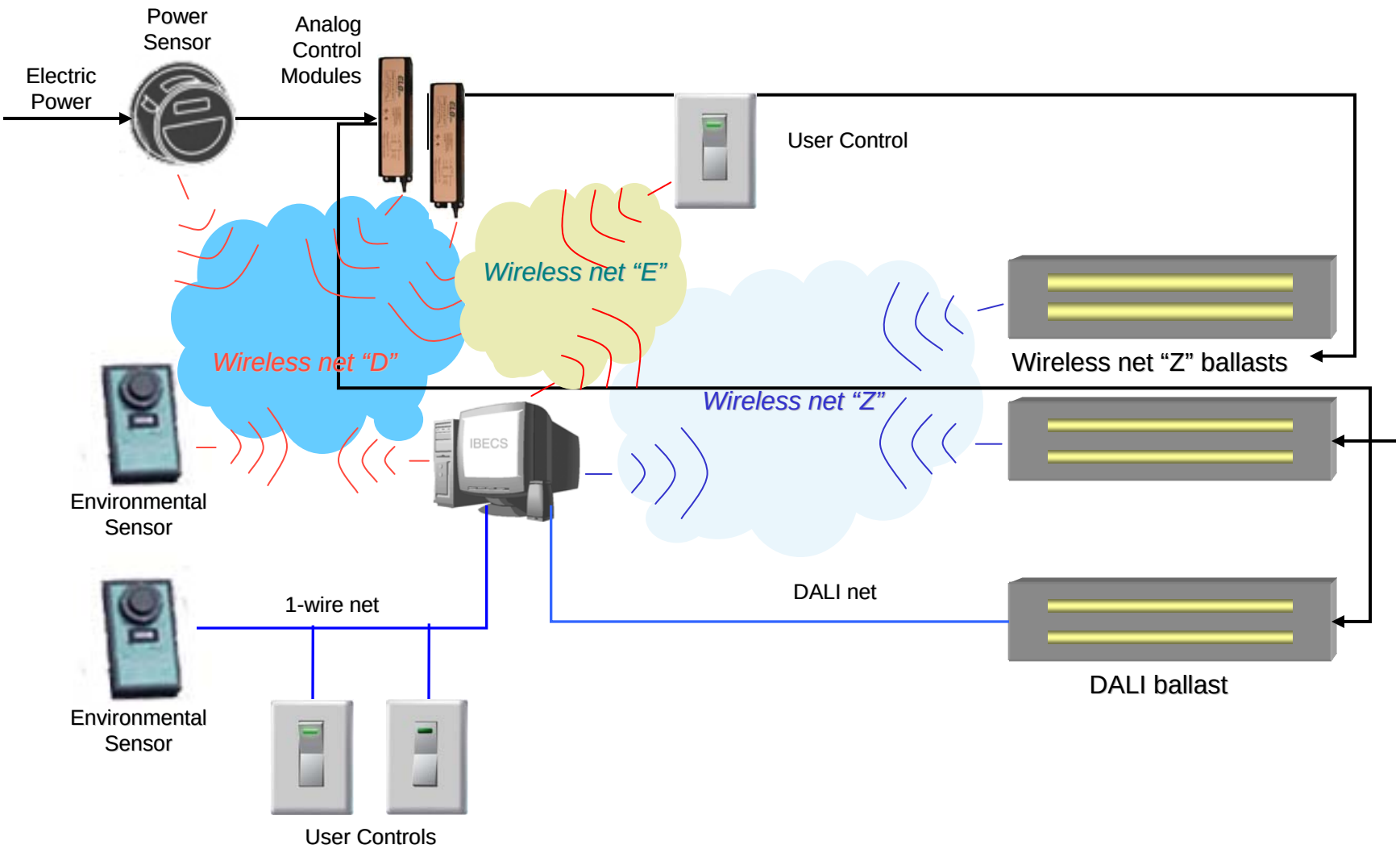

System Diagram for Future Bridge-Based IBECS

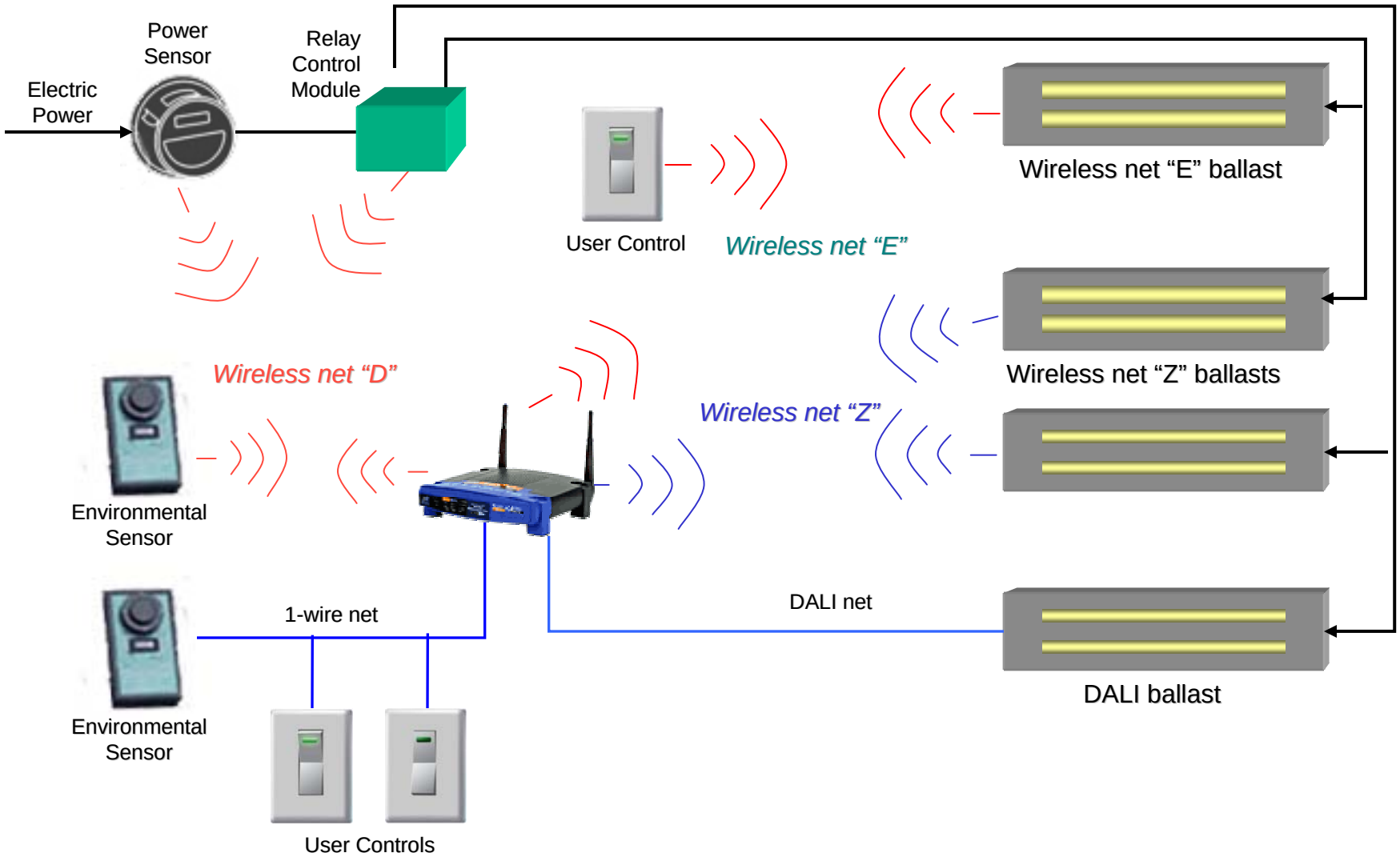

Controlling a Wireless Ballast from a Wireless Switch

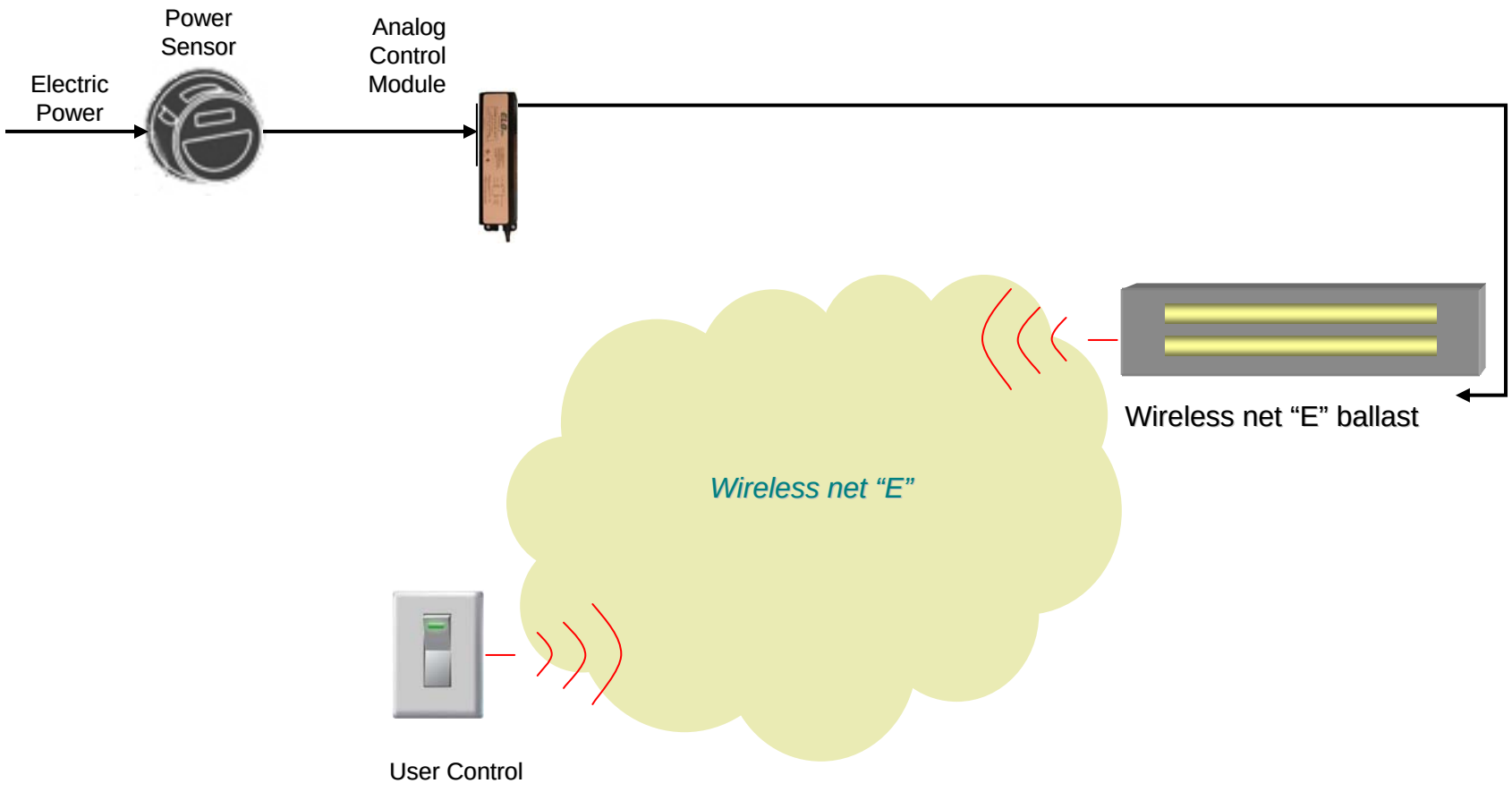

Scaling Up the IBECS Architecture

1. Room Level
2. Floor Level
3. Building Level

IBECS at the Room Level…

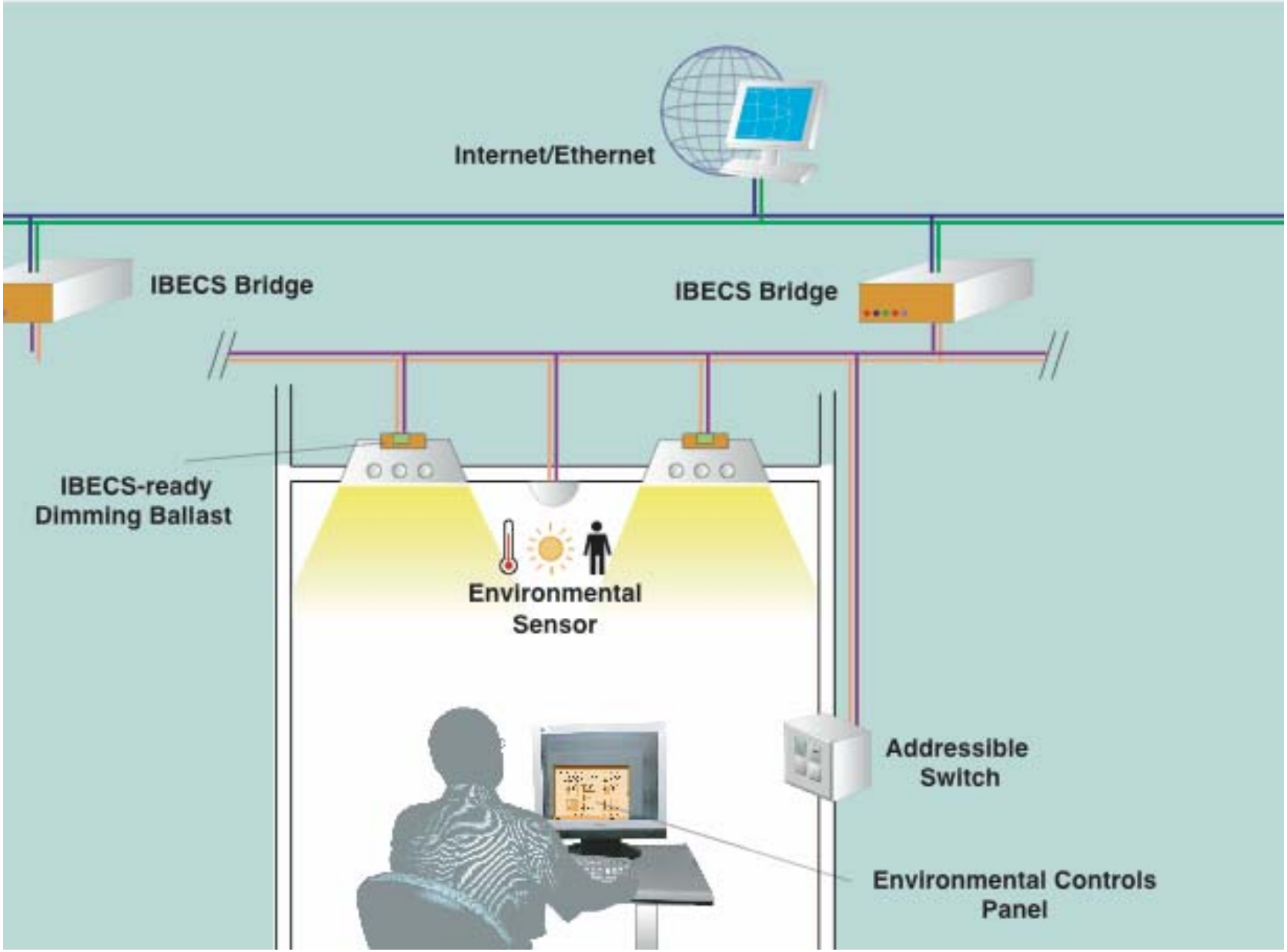

Scaled up to a Floor…

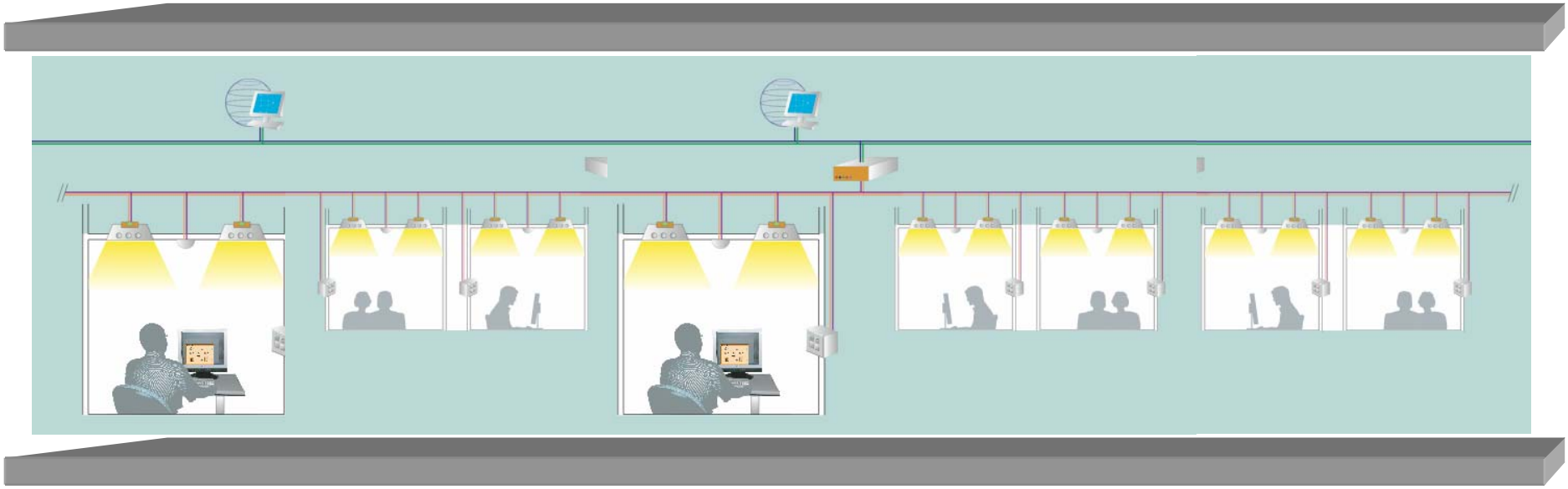

Scaled up to a Building

Dimming Ballasts Becoming More Energy-Efficient

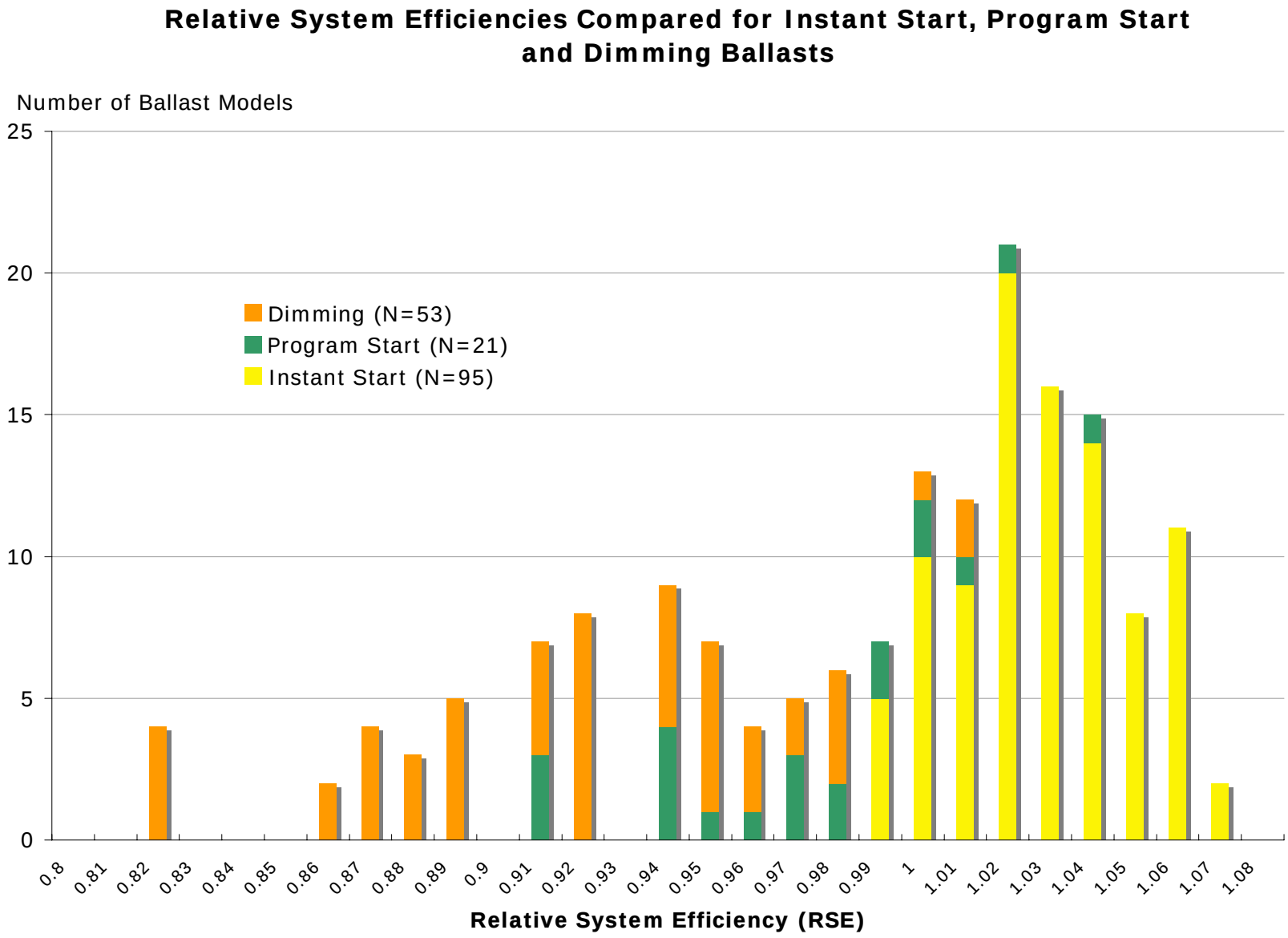

Challenges Ahead

- Sustainable drop in the cost of dimming

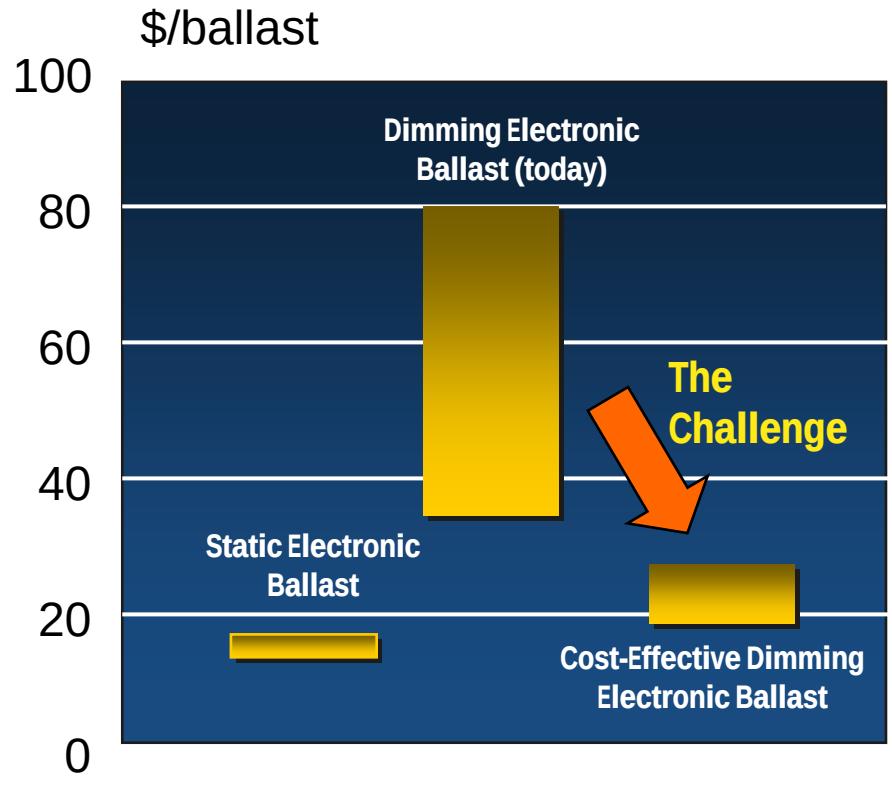

It's All in the Software

- Software needs to be developed that *adds value* to lighting systems
  - For the *business* -
    - Quality workspaces that are flexible and re-configurable
    - Improve tenant satisfaction and employee retention
  - For the *facilities manager* -
    - Implement all control strategies to reduce O&M costs
  - For the *occupants* -
    - Adjust lighting according to preference, improving comfort and satisfaction

Challenges Ahead

- Sustainable drop in the cost of dimming
- Eliminating the wiring problems for existing buildings
- Standardized solutions for integrated controls
- Breakthrough software to create “market pull”

“*A breakthrough is something that changes the behavior of hundreds of millions of people…If you took it away from them they’d say “You can’t take that away from me!”*

- Bill Gates”

Thank You!

"Don't worry about what anybody else is going to do… The best way to predict the future is to invent it. Really smart people with reasonable funding can do just about anything that doesn't violate too many of Newton's Laws!"

- Alan Kay (Computer Scientist)

IBECS Screen Shots

Screen Shot of IBECS Control Framework

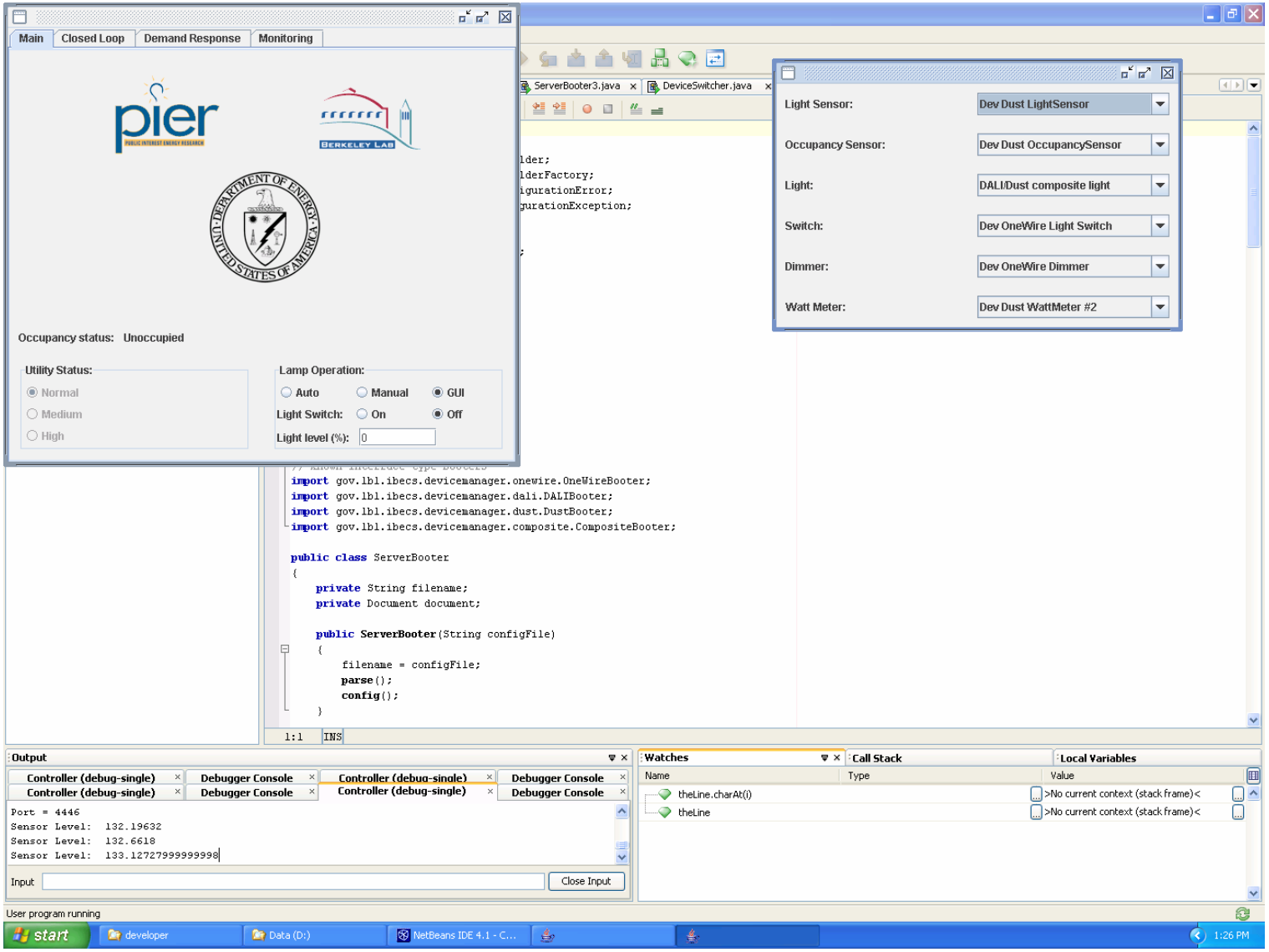

IBECS Device Picker

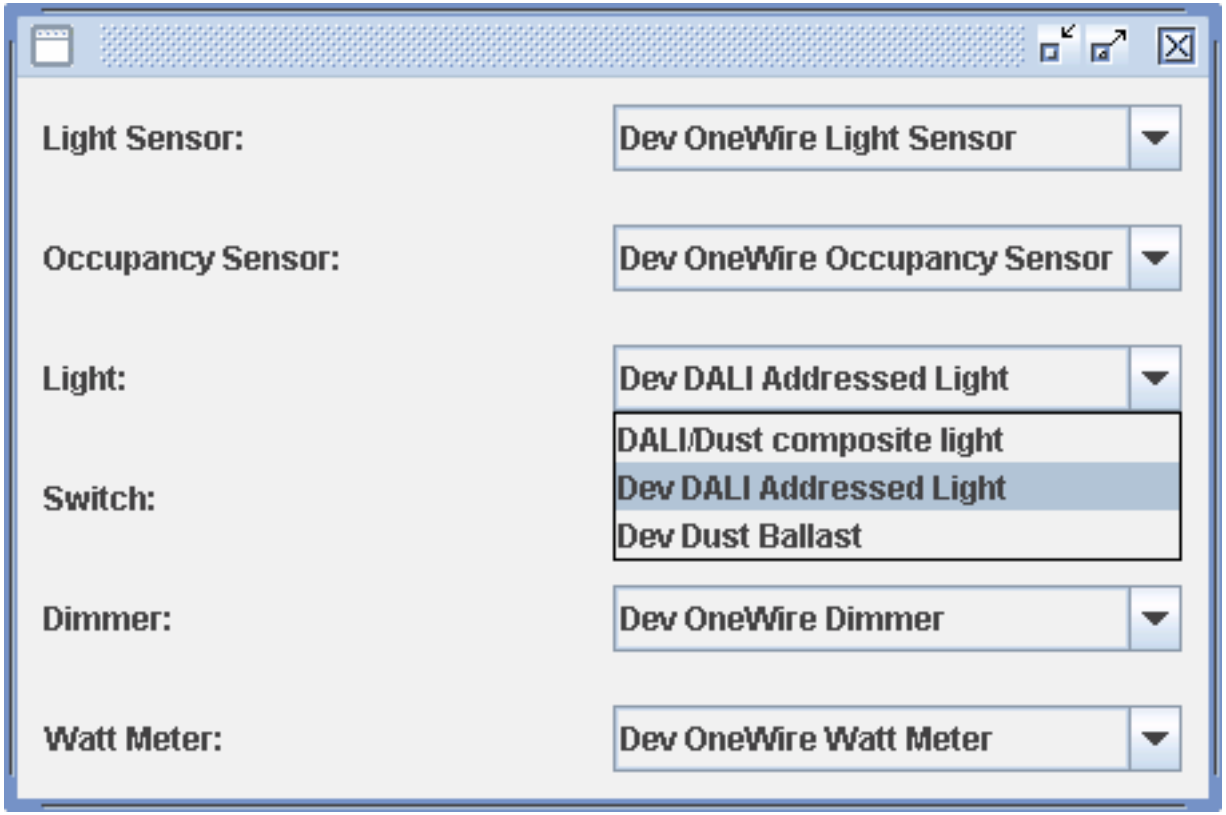

IBECS Device Picker

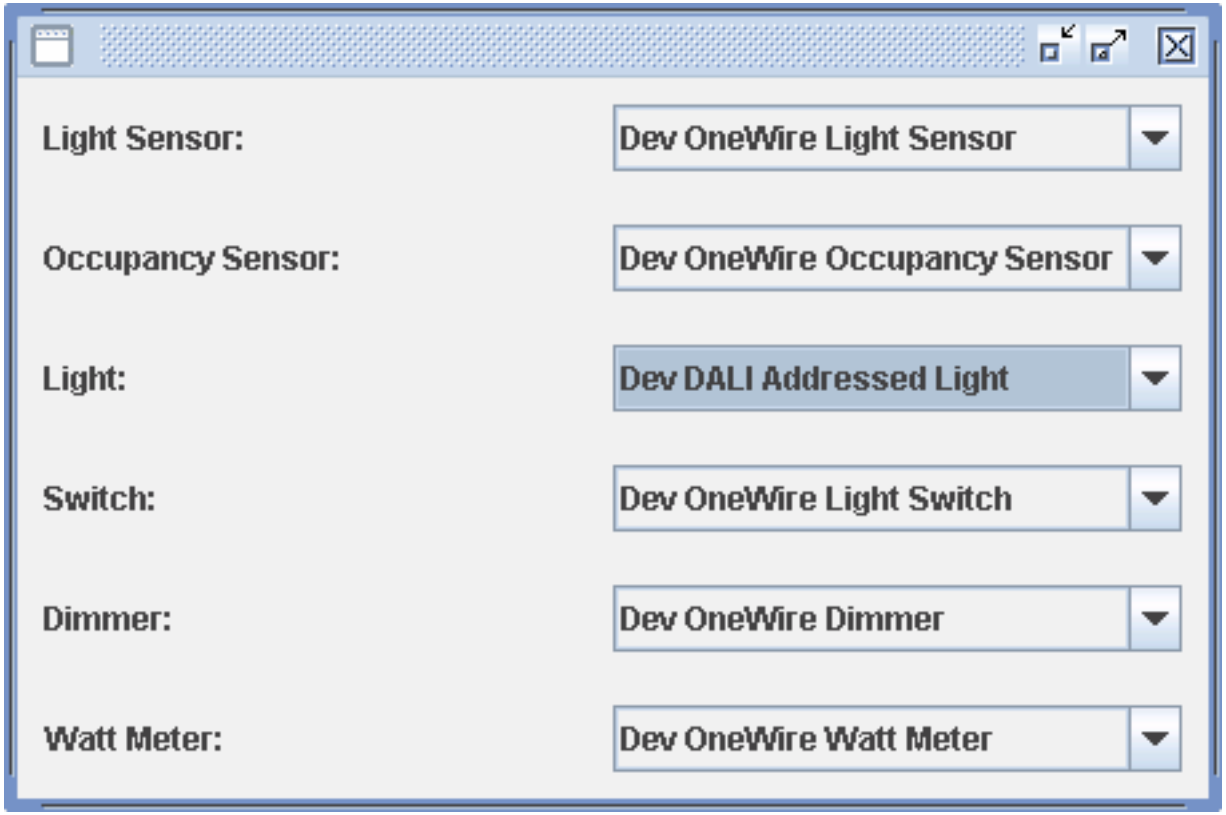
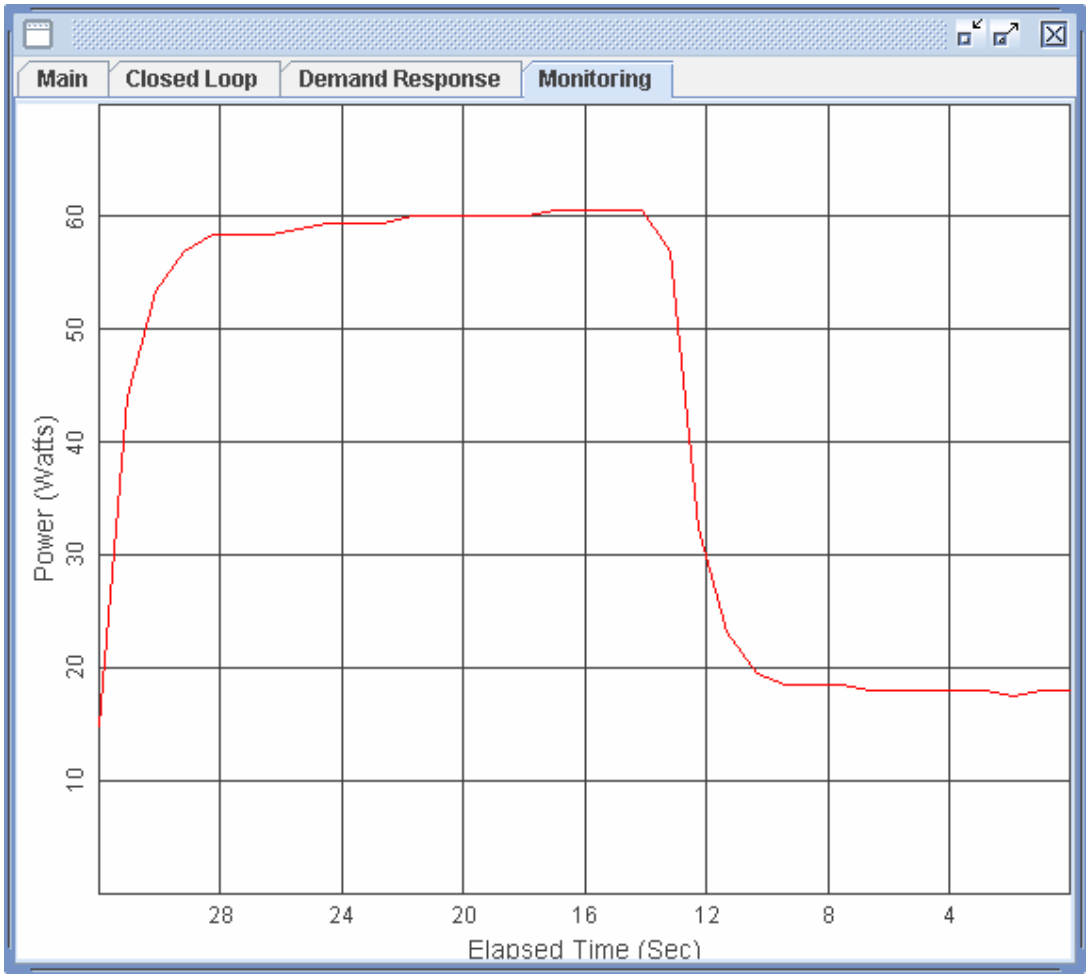
Displaying Power Consumption with IBECS