Zero Energy Residential Buildings
&
Zero Energy Windows

Rich Brown

Lawrence Berkeley National Laboratory

April, 2007

Zero Energy Residential Buildings

- **Requires whole-building approach to minimize loads, with PV to offset remaining**
- **Cut cost premium with "systems engineering"**

Ultimate goal is a home that consumes zero net utility energy over the course of a year

Technology Status

- Zero energy achieved in a few custom homes
- Production homes are significant challenge
  - Currently at about 30-40% whole-house savings
  - Need to achieve ~70% reduction in end-use consumption, to make PV system affordable
- Good progress has been made on reducing heating, cooling and water heating consumption
  - Hot climates easier than cold
- Significant challenge remains in reducing appliance, lighting, electronics, and miscellaneous consumption

Examples of Systems Engineering Cost-Saving Trade-Offs

- Advanced framing systems
- Tightly sealed house envelopes
- Shorter, less costly ductwork
- Ductwork, plumbing and wiring inside conditioned space
- Smaller, less expensive mechanical systems

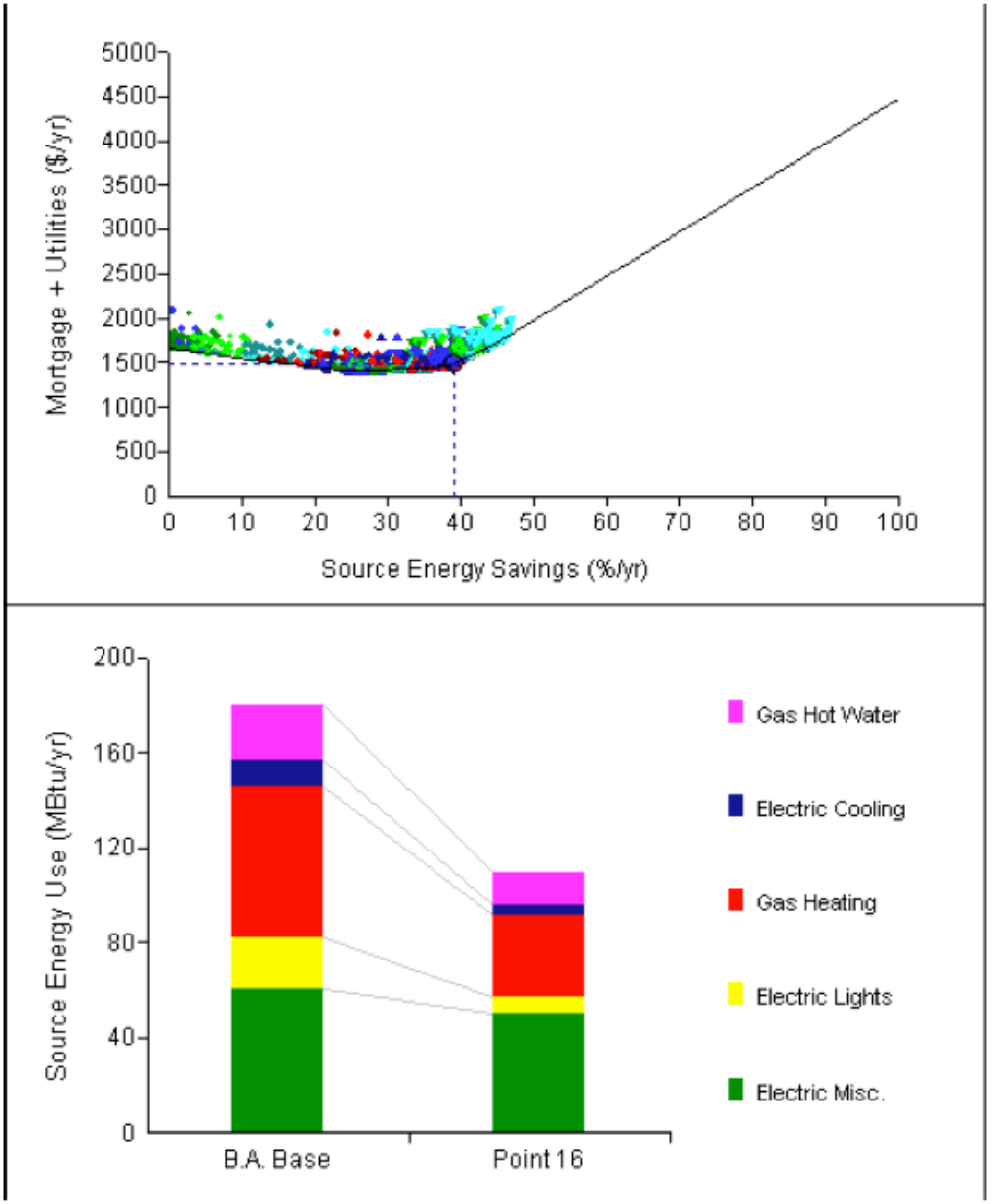

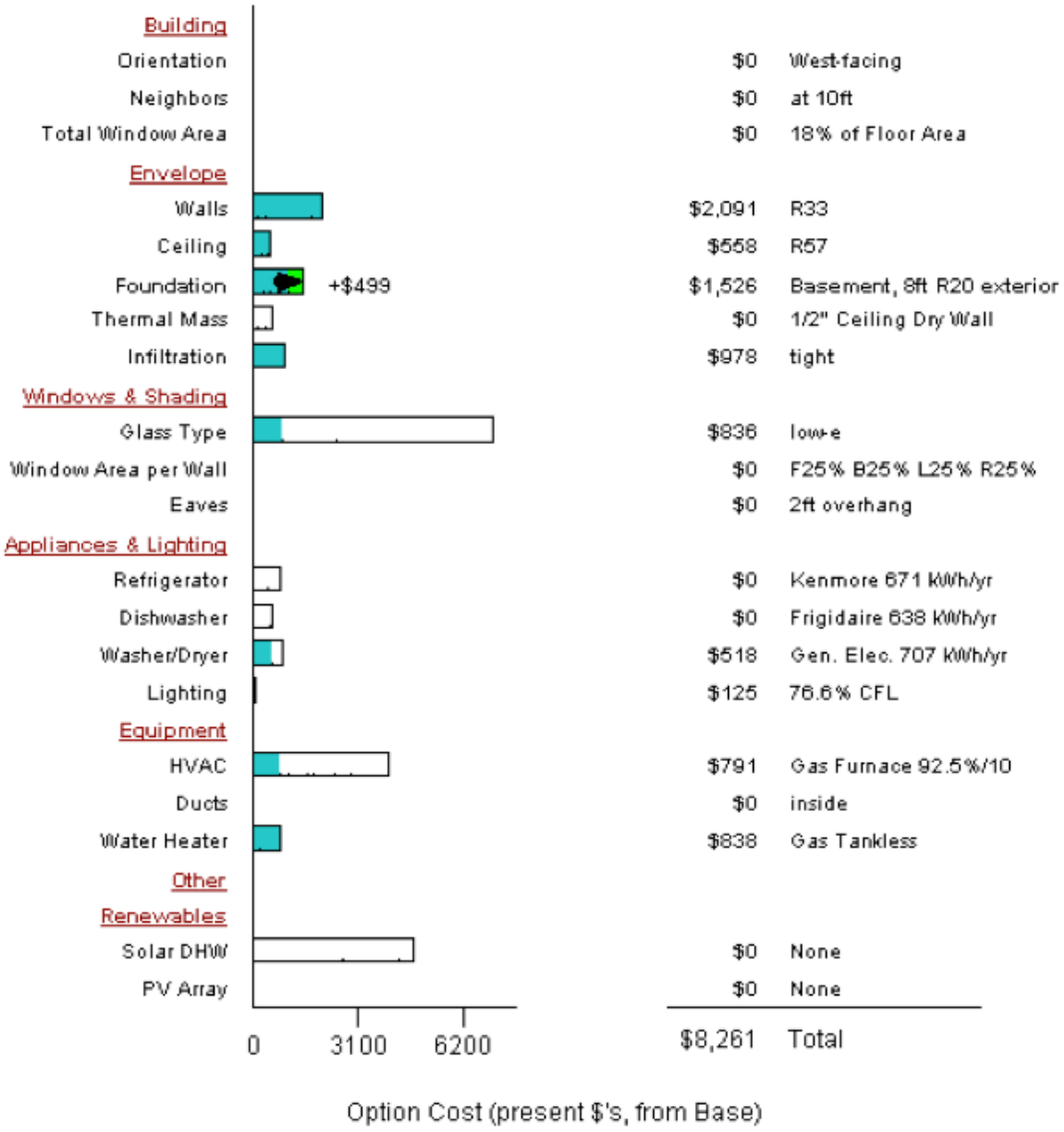

Figure 20. Chicago 40% savings point

Source: NREL/TP-550-36920, November 2004

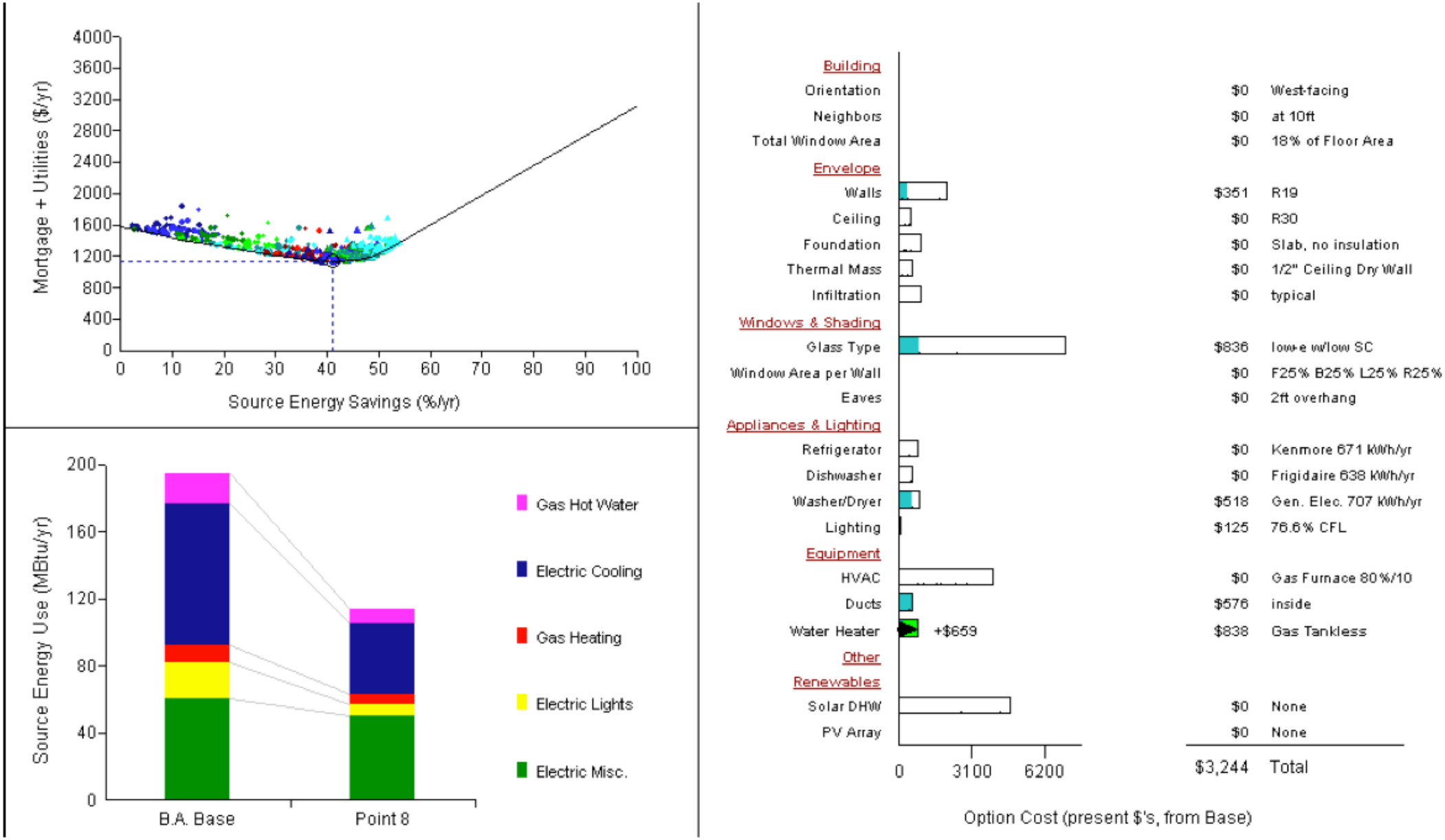

Figure 22. Phoenix 40% savings point

"Vision" for Residential Windows

- Provide all the benefits (…..light, views, ventilation) without the energy penalty of traditional windows; increase comfort
- Become a key component in achieving cost-effective Zero-Energy Homes
- Reduce large energy impact of residential windows → culminating in Zero Energy Windows

- DOE, LBNL, Efficient Windows Collaborative working together with industry to achieve this vision

Capturing Energy Savings Potential

- DOE developing novel designs to meet two goals
  1. Interim: Achieve today's best performance at lower cost
  2. Ultimate: Very highly insulating windows (U-factor=0.1) that achieve zero net energy
- Address industry concerns of
  - Weight
  - Gas loss leakage
  - Cost
- Technological solutions include
  - Improved 3-layer designs (near term)
  - Longer term: Vacuum windows
  - Longer term: Aerogel
- Complication: Best technology depends on climate

Performance Goals

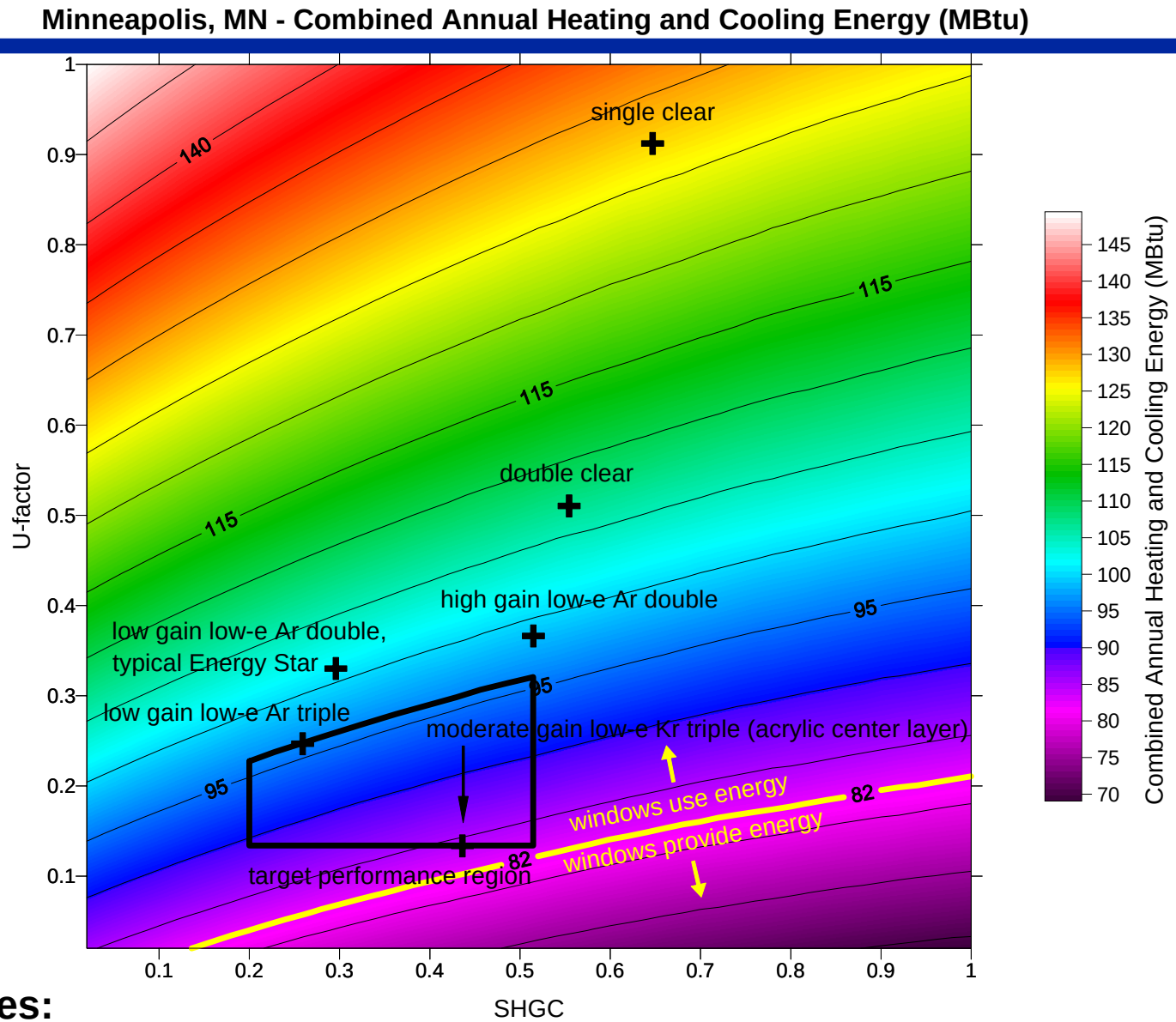

Heating Climates:

- **static high solar, hi-R (U=0.1 Btu/h-ft2-F) can meet ZEH goals**
- **dynamic solar gain (0.6 < SHGC < 0.15) and U<0.2 also meet ZEH goals**

Prototype Testing Results

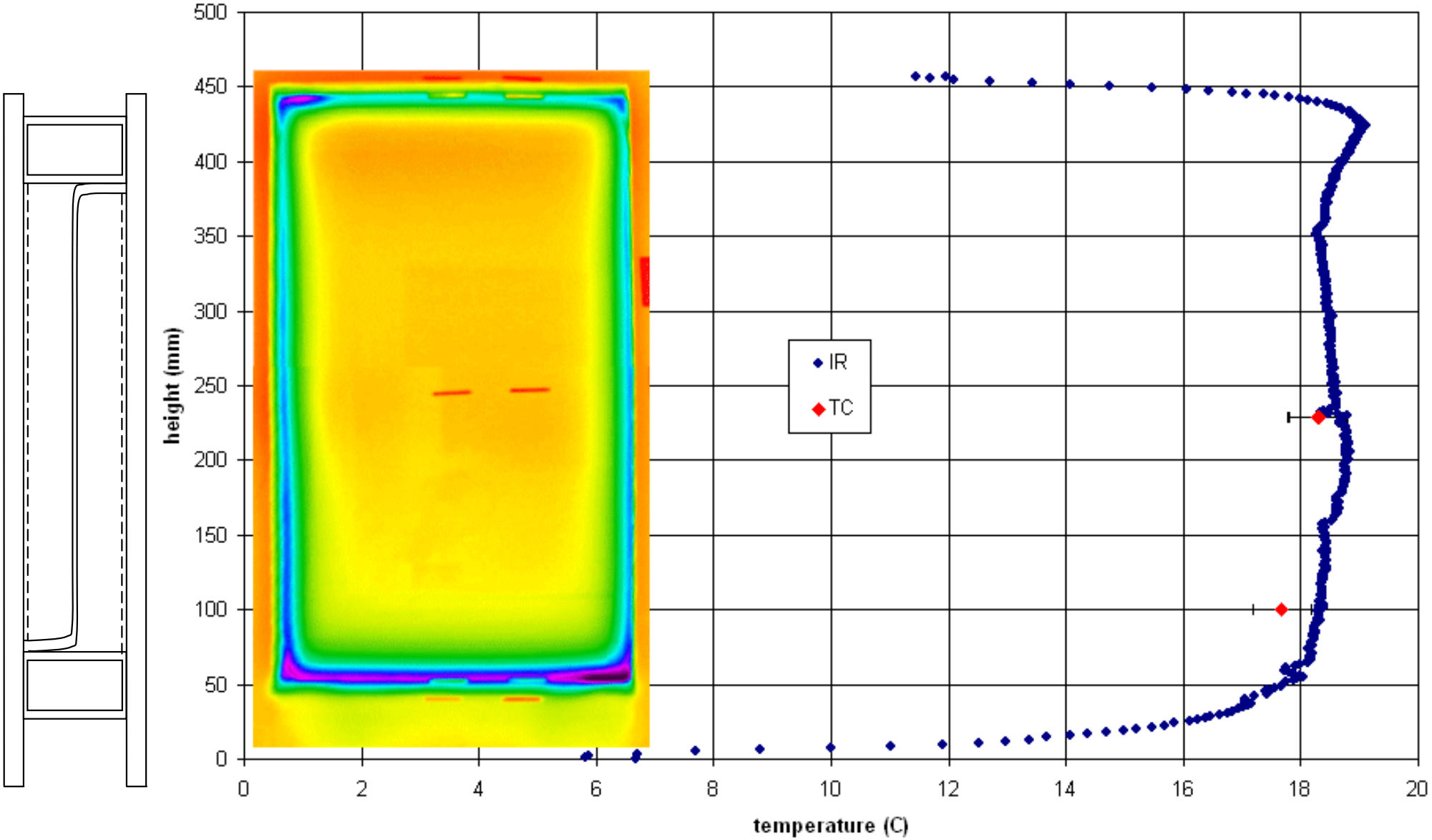

Simple insert performs as well as fixed layer

Research on Long-Term Technologies

- **Vacuum Windows**
  - Gap between glass layers is evacuated to eliminate conduction/convection
  - Pillars and edge must be strong enough to prevent implosion; these are thermal short circuits

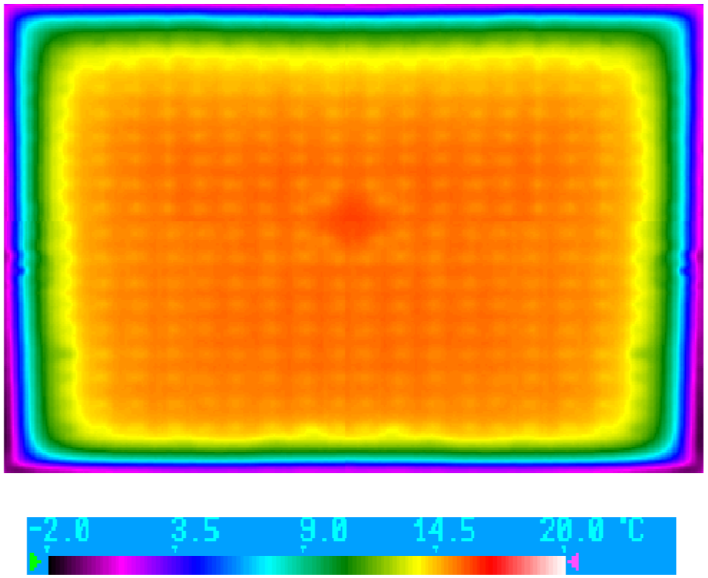

- **Aerogel**
  - Microporus "silica sponge"
  - R&D continues on improving visual properties; current products are translucent

Zero-Energy Window Prototype

- **Prototype of highly-insulating dynamic window (achieves "zero energy" in many climates)**

U = 0.18

SHGC = 0.34

VT = 0.49

U = 0.18

SHGC = 0.04

VT = 0.01

Zero-Energy Prototype (2)

- **Zero-Energy prototype utilizes**
  - **Sage Electrochromic glazing**
  - **LBNL center layer design for highly insulating window**

- **Next research steps**
  - **Working with plastics manufacturers on plastic center layer production**
  - **Beginning research on highly insulating frame materials and design (50% heat loss through frame with hiR units)**

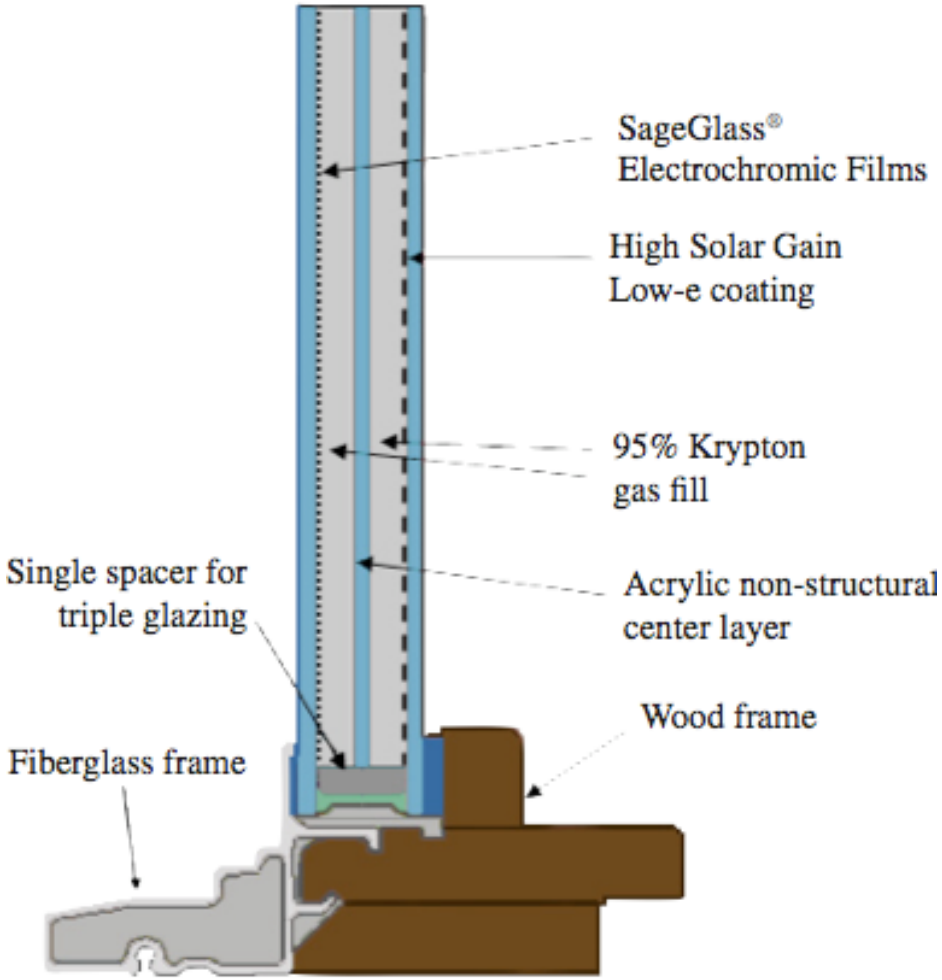

Low-Energy Home Demonstration

- Affordable home in western MA (CARB)
- Heat Mirror (U=0.2) windows provided by builder's normal window supplier at no price premium
- Typical price premium strongly related to special order process
- Short-term comfort studies in unoccupied home (window-surface and mean-radiant temperatures)
- Calibrated simulation to estimate long-term energy savings

MA Demonstration House

Research on Near-Term Technologies

- Current technologies for highly insulating products use multiple layers of low-e and gas fill
  - All glass is heavy
  - Thin film products expensive
  - Multiple spacers can lead to gas leakage

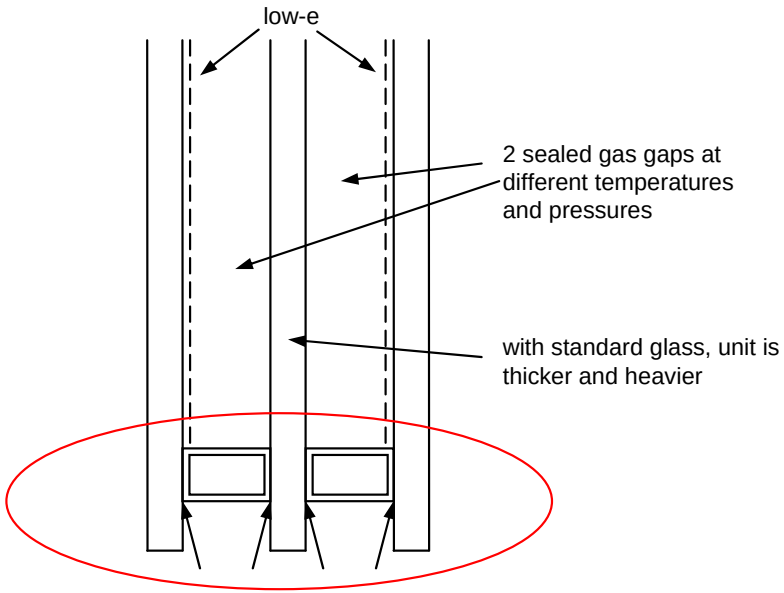
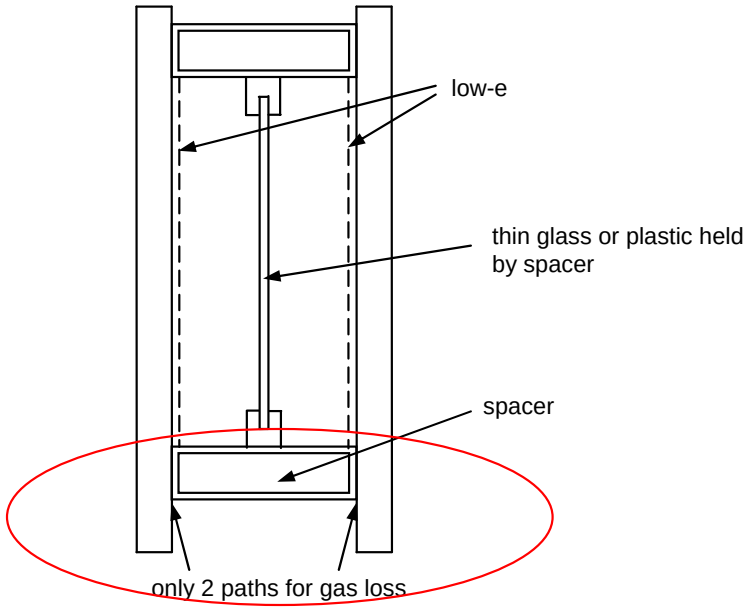
- LBNL research aims to develop lower-cost, non-structural center layers
  - Utilize available low-e and gas-fill technologies
  - Research novel center layer designs and materials